Standard Drawings for Sewer and Water

Volume 3 of the Ontario Provincial Standard Drawings (OPSD), and the current City of London Standard Drawings, are amended as follows:

Title of Drawing	Date of Drawing	City of London Drawing Classification	Ontario Provincial Standard Drawings	Date Drawing Superseded or Deleted	Old Drawing Title (if applicable)
Bedding Standard For Gravity And Pressure Pipe	8/15/2013	SW-1.0	-	2/29/2000	Bedding Standard For Gravity And Pressure Pipe
Concrete Bedding For Rigid Pipe	3/15/1996	SW-1.1	-	-	-
-	-	-	1003.01	12/1/1988	Manhole Drop Structure - Tee
-	-	-	1003.02	12/1/1988	Manhole Drop Structure Wye
Maintenance Drop Structure Wye	09/09/2019	SW-2.0	-	11/1/2004	Manhole Drop Structure - Wye
Safety Platform Aluminium	1/30/1999	SW-2.5	-	-	-
600X840 Precast Concrete Curb Inlet Catch basin	11/12/2012	SW-3.0	-	2/29/2000	600X840 Precast Concrete Curb Inlet Catch Basin
Catch Basin Pipe Subdrain Detail	09/09/2019	SW-3.1	-	11/1/2013	Catch basin Pipe Subdrain Detail
Precast Concrete Catch Basin Maintenance Hole	3/20/2002	SW-4.0	-	3/1/1998	Precast Concrete Catch Basin in Manhole
Maintenance Hole Adjustment Unit Detail	8/15/2013	SW-5.0	-	3/1/1998	Manhole Adjustment Unit Detail
Precast Concrete Maintenance Hole Tee	1/17/2003	SW-5.1	707.01	9/15/1996	Precast Concrete Maintenance Hole Tee
Steps in Maintenance Hole Benching	2/29/2000	SW-5.2	-	-	-
Maintenance Hole Cast Iron Watertight Liner	2/29/2000	SW-5.3	-	-	-

Title of Drawing	Date of Drawing	City of London Drawing Classification	Ontario Provincial Standard Drawings	Date Drawing Superseded or Deleted	Old Drawing Title (if applicable)
Sanitary Sewer Dog-House Maintenance Hole	9/14/2012	SW-5.4	-	-	-
Catch Basin Frame and Grate “Fish Grate”	11/12/2012	SW-5.5	-	-	-
-	-	-	1006.02	12/1/1988	Sewer Service Connections for Rigid Pipe
Private Drain Connection	11/1/2013	SW-6.0	-	10/28/2008	Private Drain Connection
PDC Riser Type I – Stable Banks	09/09/2019	SW-6.1	-	10/3/2014	PDC Riser Type I
PDC Riser Type 2 – Unstable Banks	09/09/2019	SW-6.2	-	10/26/2009	PDC Riser Type 2
PDC Vertical Riser Installation	09/09/2019	SW-6.3	-	10/3/2014	PDC Vertical Riser Installation
Private Drain Cleanout	8/15/2013	SW-6.4	-	11/12/2012	Private Drain Cleanout
Standard Servicing Locations for Single Family and Semi-Detached Lots	3/1/1998	SW-7.0	-	2/15/1997	Standard Servicing Locations for Single Family and Semi-Detached Lots
-	-	-	-	5/23/2002 Included in the UCC Manual	Standard Utility Locations For All Streets
Hydrant And Valve Installation	09/09/2019	W-CS-1 Sheet 1	-	9/12/2018	Hydrant and Valve Installation
Tracer Wire Installation	9/23/2014	W-CS-1 Sheet 2	-	-	-
Metered Automatic Flushing Device	8/31/2017	W-CS-2 Sheet 1	-	-	-

Title of Drawing	Date of Drawing	City of London Drawing Classification	Ontario Provincial Standard Drawings	Date Drawing Superseded or Deleted	Old Drawing Title (if applicable)
9800 Automatic Flushing Device Detail	8/31/2017	WCS-2 Sheet 2	-	-	-
Note for Designers With Regard to Automatic Flushing Devices Discharge Rates	8/31/2017	W-CS-2 Sheet 3	-	-	-
Standard 50mm Blow Off Installation	11/6/2006	W-CS-5	-	1/31/1999	Standard 50mm Blow Off Installation
Standard Valve Rod Extension Piece For 40mm And Larger Valves	11/6/2006	W-CS-6	-	1/31/1999	Standard Valve Rod Extension for 40mm and Larger Valves
Standard Valve Rod Extension Piece and Valve Box for 40mm and 50mm Valves	10/31/2018	W-CS-6 Sheet 2	-	-	-
Standard Installation Of 16mm Water Meter	11/1/2004	W-CS-7	-	2/29/2000	Standard Installation of 16mm Water Meter
Standard Installation of 25mm Water Service (Sht 1)	09/12/2019	W-CS-8 Sheet 1	-	9/12/2019	Standard Installation Of 25mm Water Service (Sht 1)
Standard Installation Of 20mm & 25mm Water Service (Sht 2)	1/30/1999	W-CS-8 Sheet 2	-	-	-
Bottom Board For Standard Installation Of 20mm & 25mm Water Service (Sht 3)	1/30/1999	W-CS-8 Sheet 3	-	-	-
Zinc Anode Installation on all Copper Water Service Tubing (Sht. 4)	09/12/2019	W-CS-8 Sheet 4	-	10/28/2008	Zinc Anode Installation on all Copper Water Service Tubing (Sht. 4)

Title of Drawing	Date of Drawing	City of London Drawing Classification	Ontario Provincial Standard Drawings	Date Drawing Superseded or Deleted	Old Drawing Title (if applicable)
Standard Mechanical Joint Offset Installation Using Tiebolt Couplings	1/26/2012	W-CS-12	-	2/29/2000	Standard Mechanical Joint Offset Installation Using Tiebolt Couplings
Grip Ring Restrainer Assembly	2/29/2000	W-CS-12 Sheet 2	-	-	-
Typical Restraint Details	11/6/2006	W-CS-12 Sheet 3	-	-	-
Standard Installation of 40mm & 50mm Water Service	09/12/2019	W-CS-22	-	10/16/2007	Standard Installation of 40mm & 50mm Water Service
Cathodic Protection Assemblies for 20mm to 50mm Water Service	2/29/2000	W-CS-24	-	-	-
Cathotic Protection for 100mm and Larger Water Services	1/30/1999	W-CS-25	-	-	-
Typical Installation for 20mm, 40mm, and 50mm Disc Type Water Meter(Sheet 1)	1/30/1991	W-CS-30 Sheet 1	-	-	-
Typical Turbine Water Meter Installation for 75mm to 200mm	1/30/1999	W-CS-30 Sheet 2	-	-	-
Schematic Layout of 100mm and Larger Service	11/1/2004	W-CS-31 Sheet 1	-	-	-
Typical Thrust Blocks for Watermains Sheet 1	09/12/2019	W-CS-43 Sheet 1	-	10/31/2018	Typical Thrust Blocks for Watermains Sheet 1
-	-	-	-	11/1/2004	Typical Vertical Thrust Blocks For Watermains (sheet 2)

Title of Drawing	Date of Drawing	City of London Drawing Classification	Ontario Provincial Standard Drawings	Date Drawing Superseded or Deleted	Old Drawing Title (if applicable)
Typical Thrust Blocks for Watermains (sheet 3)	09/12/2019	W-CS-43 Sheet 3	-	10/31/2018	Typical Thrust Blocks for Watermains (sheet 3)
Standard Location for Water Valves at Intersections With 9.0m and 10.5m Curb Radii	1/30/1999	W-CS-45	-	-	-
Standard City of London 737mm Frame and Cover	1/30/1999	W-CS-51	-	-	-
Disinfection	09/12/2019	W-CS-60	-	1/30/1999	Sterilizing Mains
Typical Service Entrances 100mm to 200mm	11/1/2004	W-CS-66	-	-	-
Remote Water Meter Register Installation	1/30/1999	W-CS-67	-	3/7/1985	Remote Water Meter Register Installation
Insulation of Watermain and Offsets (Protection from Freezing)	11/3/2015	W-CS-68	-	1/26/2012	Insulation of Shallow Mains and Offsets
450mm and Up Typical Watermain Support Detail for Utility Crossings Using Open Cut Construction	10/1/2012	W-CS-69 Sheet 1	-	9/16/2003	450mm and Up Typical Watermain Support Detail for Utility Crossings Using Open Cut Construction
Typical Reinstatement / Bedding Details for 450mm and Up Watermain Support	08/26/2019	W-CS-69 Sheet 2	-	10/1/2012	Typical Reinstatement / Bedding Details for 450mm and Up Watermain Support

Title of Drawing	Date of Drawing	City of London Drawing Classification	Ontario Provincial Standard Drawings	Date Drawing Superseded or Deleted	Old Drawing Title (if applicable)
General Submission and Design Requirements for Watermain Support and Bedding / Reinstatement	08/26/2019	W-CS-69 Sheet 3	-	10/1/2010	General Submission and Design Requirements for Watermain Support and Bedding / Reinstatement
Valve Box on Chambers	11/20/2009	W-CS-70	-	-	-
Metered Irrigation System and Backflow Prevention Assembly	9/24/2014	W-CS-71	-	1/26/2012	Metered Irrigation System and Backflow Prevention Assembly
Casing Detail	08/26/2019	W-CS-72	-	9/12/2018	Casing Detail
Typical Air Valve Chamber	9/24/2014	W-CS-74	-	-	-
Check Valve Chamber (Plan View)	09/09/2019	W-CS-75 Sheet 1	-	9/26/2017	Check Valve Chamber (Plan View)
Check Valve Chamber (Section View)	09/09/2019	W-CS-75 Sheet 2	-	9/26/2017	Check Valve Chamber (Section View)

RIGID PIPE – CLASS B

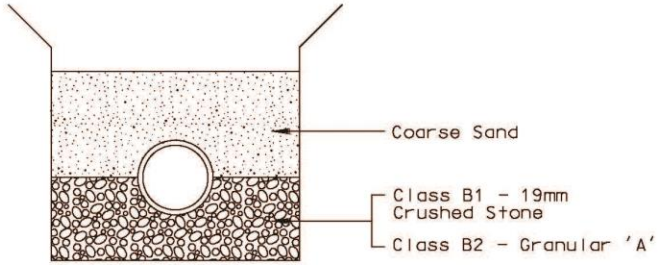

NOTE: PROPERLY CONSOLIDATED AND COMPACTED CLASS B1 BEDDING TO BE EXCLUSIVELY UTILIZED AS BEDDING MATERIAL WITHIN 5.0m OF ALL MANHOLES IN ALL SITUATIONS WHERE RIGID PIPE IS SPECIFIED.

RIGID PIPE – CLASS C

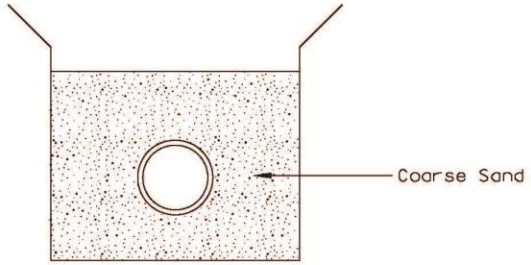

NOTE: PROPERLY CONSOLIDATED AND COMPACTED CLASS B1 BEDDING TO BE EXCLUSIVELY UTILIZED AS BEDDING MATERIAL WITHIN 5.0m OF ALL MANHOLES IN ALL SITUATIONS WHERE RIGID PIPE IS SPECIFIED.

TRENCH DIMENSIONS FOR ALL PIPE SEWERS

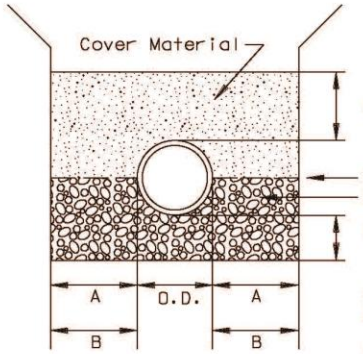

A = 300mm Minimum for pipe 100mm to 900mm O.D.

B = 375mm Minimum for pipe greater than 900mm O.D.

FLEXIBLE PIPE

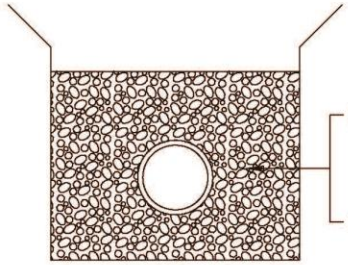

NOTE: PROPERLY CONSOLIDATED 19mm CRUSHED STONE BEDDING TO BE EXCLUSIVELY UTILIZED AS BEDDING AND COVER MATERIAL WITHIN 5.0m OF ALL MANHOLES IN ALL SITUATIONS WHERE FLEXIBLE PIPE IS SPECIFIED.

CITY OF LONDON STANDARD DRAWING

BEDDING STANDARD FOR GRAVITY AND PRESSURE PIPE

DWG:	DATE	APPROVED BY CITY ENGINEER:	
SW–1.0	2013 08 15	JUSTIN LAWRENCE	NTS

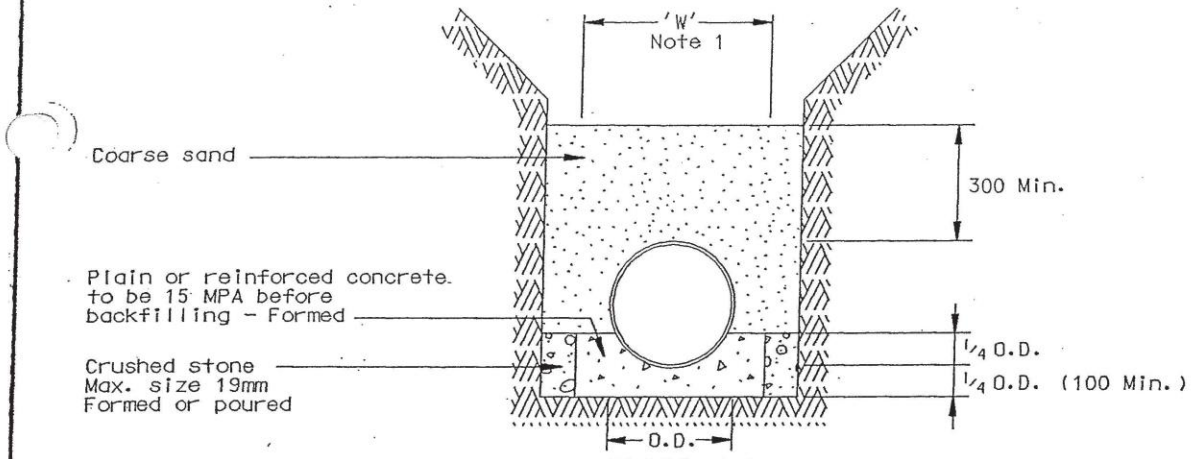

CLASS A-1
CONCRETE CRADLE BEDDING

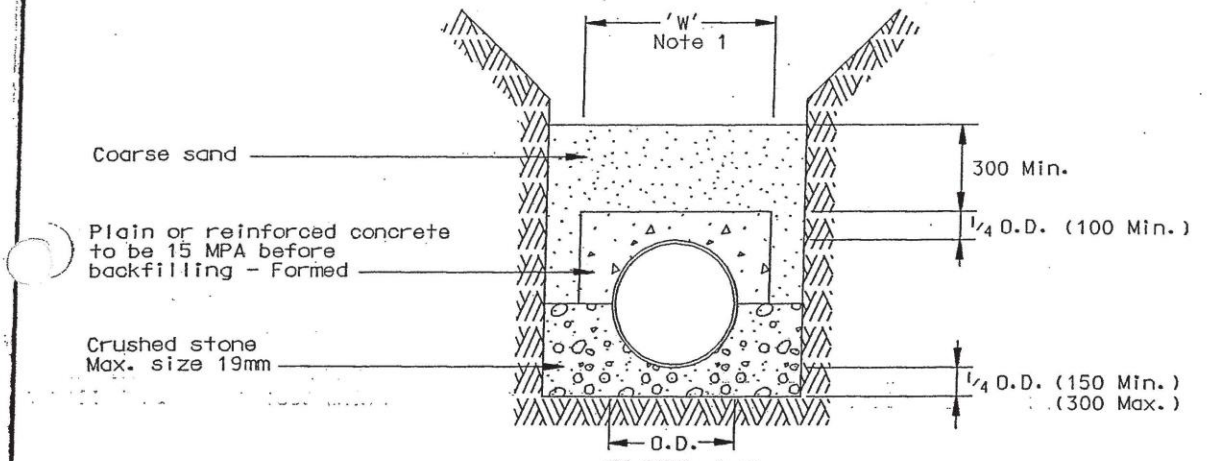

CLASS A-2
CONCRETE ARCH BEDDING

NOTES:

1. 'W' = O.D. + 200mm for pipe sizes up to and including 600mm in dia. and 1-1/4 O.D. for pipe sizes greater than 600mm.
2. 'P' is the ratio of area of steel to the area of concrete at the crown for concrete arch, and at the invert for concrete cradle.
3. All bedding materials to be mechanically compacted in accordance with City of London Standard Contract Documents
4. When reinforcing steel is required to obtain a specific load factor, design detail shall be submitted to the Contract Administrtator for approval.

A. ALL DIMENSIONS ARE IN MILLIMETERS UNLESS OTHERWISE SHOWN

Load Factors:

= 2.8 for plain concrete

= 3.4 for reinforced concrete with p = 0.4%

= 4.8 for reinforced concrete with p = 1.0%

CITY OF LONDON STANDARD DRAWING

CLASS A-1 CONCRETE CRADLE BEDDING AND CLASS A-2 CONCRETE ARCH BEDDING FOR RIGID PIPE

DWG	DATE	APPROVED BY CITY ENGINEER
SW-1.1	1996 03 15	John W Taylor

A. ALL DIMENSIONS ARE IN MILLIMETERS UNLESS OTHERWISE SHOWN

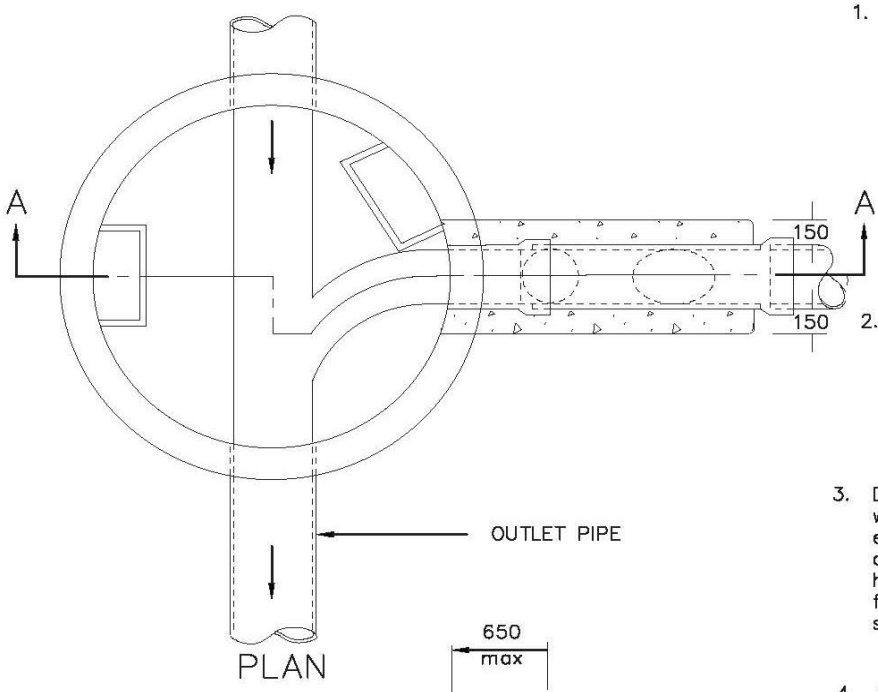

PLAN

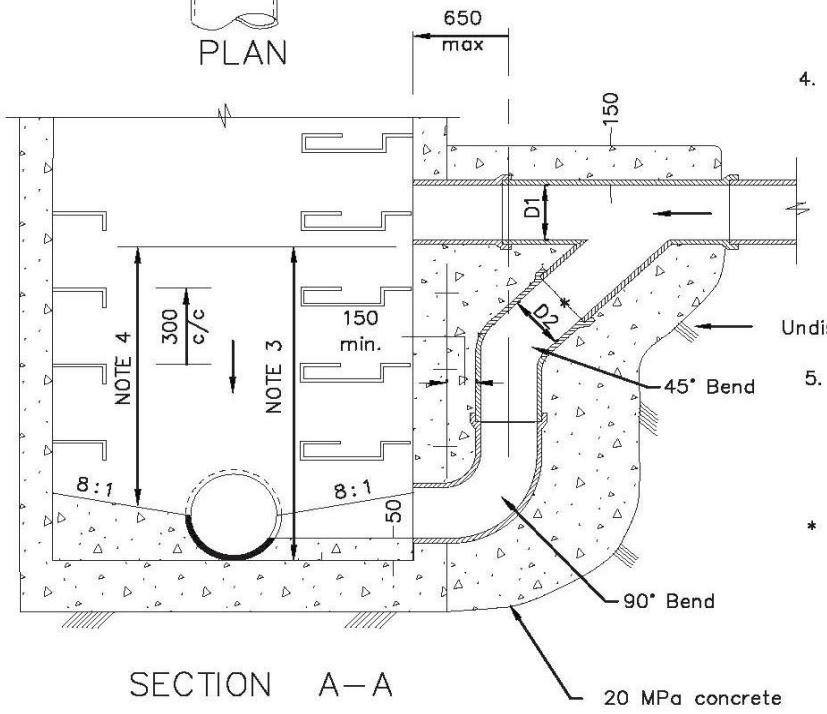

SECTION A–A

NOTES:

1. Drop structure to be completely encased in a minimum 150mm of 20 MPa concrete and secured to the maintenance hole with 450mm long, 13mm dia threaded rods and drilled expansion anchors down both sides of the drop pipe at 300mm c/c.
2. For pipe sewer sizes 200mm to 450mm (inside pipe diameter) D1 = D2*. For pipe sewer sizes equal to or greater than 525mm Dia. D2 = 450mm Dia*.
3. Drop structures shall be constructed when the difference in invert elevations between the upstream and outlet sewers in the maintenance hole is equal or greater than 600mm for sanitary sewers and 900mm for storm sewers.
4. When the difference in elevation between the upstream invert and the top of the benching exceeds 1.50m, an additional set of steps are required adjacent to the overflow pipe for maintenance operations.
5. Maintenance hole steps shall be located to avoid conflict with an inletting or out letting sewer pipe. Access to maintenance hole must be above the benching platform.

* Due to fitting sizes, when the difference in the drop structure invert elevations is less than 1.2m, and the 450mm drop cannot physically be constructed, then D2 could be reduced to 375mm, or as approved by the Contract Administrator.

CITY OF LONDON STANDARD DRAWING

MAINTENANCE DROP STRUCTURE WYE

DWG	DATE	APPROVED BY
SW–2.0	2019 09 09	CITY ENGINEER

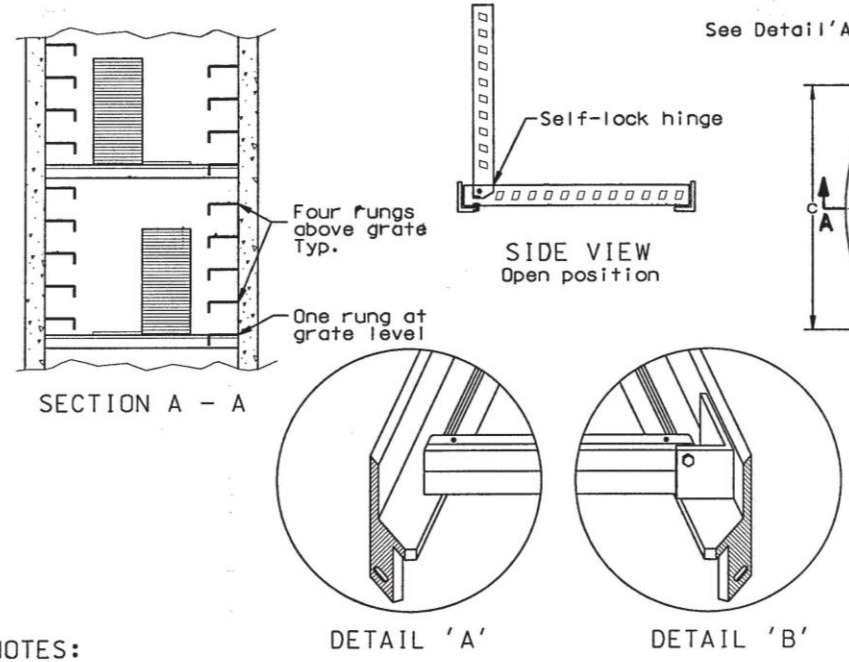

NOTES:

A Aluminum components contacting concrete shall be painted with one coat of asphalt or tar base black paint, having a minimum softening point of 71° C. All joints and crevices shall be thoroughly coated.
B Manhole depth between 5.0m and 10.0m, grate to be placed at mid - point. Manhole depth between 10.0m and 15.0m, grate to be placed at third - points.
C All fasteners to be 304 stainless steel.
D All welding shall conform to CSA Standard W47.2.
E All aluminum shall be 6351-T6.
F Design to CSA Standard S157.
G All dimensions are in millimeters or meters unless otherwise shown.

MH Diameter	No. of Grates	a	b	c	d	e	f
1200	2	900	850	850	225	352	65
1500	2	1128	1078	1078	311	419	65
1800	3	1344	1293	1293	308	360	65
2400	4	1774	1724	1724	401	360	65

CITY OF LONDON STANDARD DRAWING

SAFETY PLATFORM, ALUMINUM
FOR CIRCULAR MAINTENANCE HOLE

DWG: SW – 2.5	DATE 1999 01 30	APPROVED BY CITY ENGINEER:	NTS

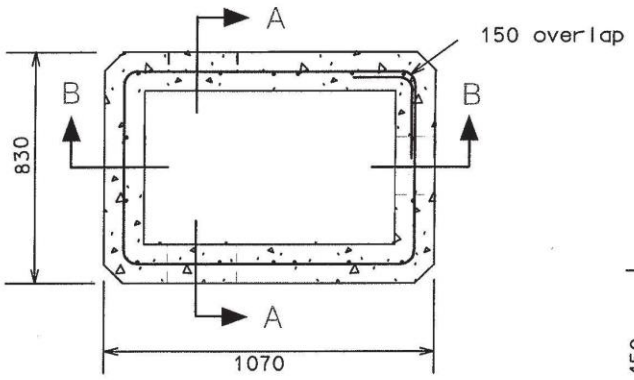

PLAN

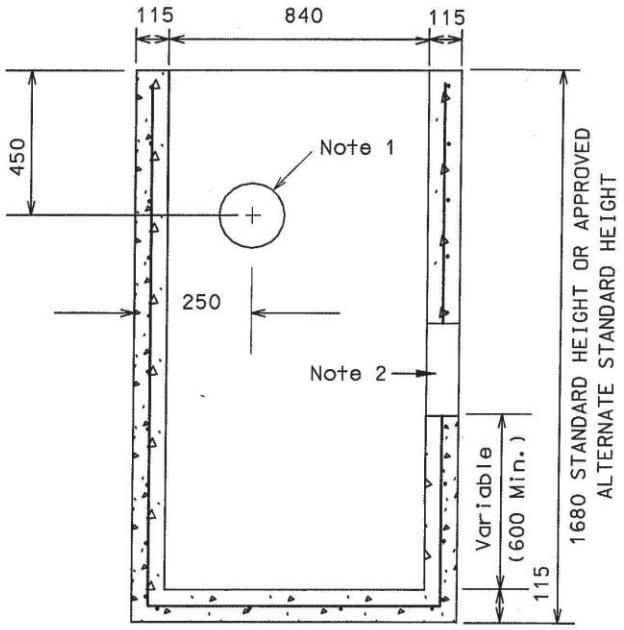

SECTION B–B

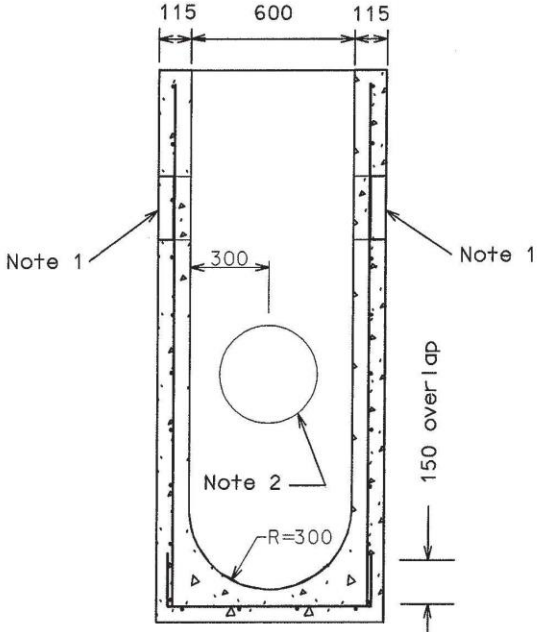

SECTION A–A

NOTES:

1. 200mm dia. knockout to accommodate subdrain. Knockout to be half wall thickness from the outside.
2. Outlet hole size 400mm dia. location as required.
3. All reinforcing steel bars to be 15. Reinforcing steel shall have 50mm cover

A. ALL DIMENSIONS ARE IN MILLIMETERS UNLESS OTHERWISE SHOWN

4. Granular backfill to be placed and compacted to a min. thickness of 300mm all around
5. Adjustment units shall be installed as per OPSD-704.010. Minimum of 1 unit and a maximum of 300mm.
6. Class of concrete: 30 MPa at 28 days
7. Refer to OPSD-400.09 for catch basin cast iron curb inlet overflow plate details.

CITY OF LONDON STANDARD DRAWING

600 X 840
PRECAST CONCRETE CURB INLET CATCHBASIN

DWG	DATE	APPROVED BY CITY ENGINEER
SW-3.0	2012 11 12	

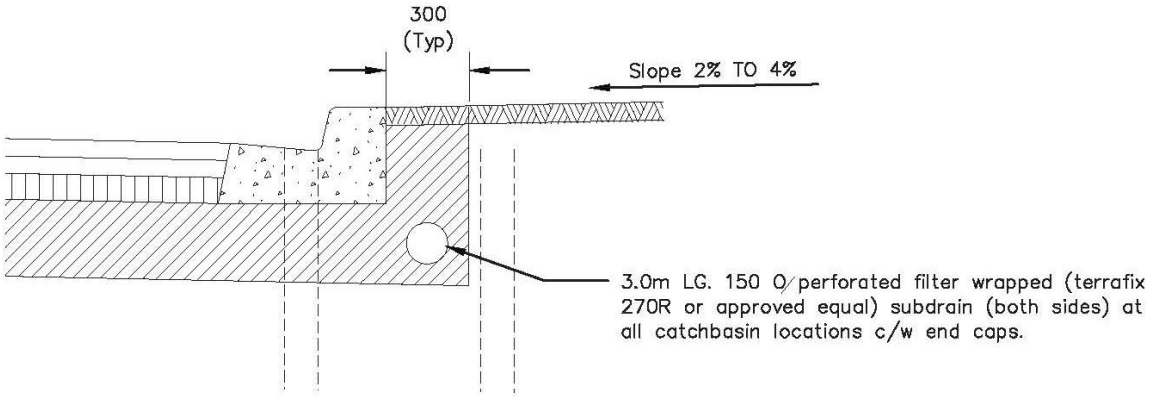

SECTION A–A

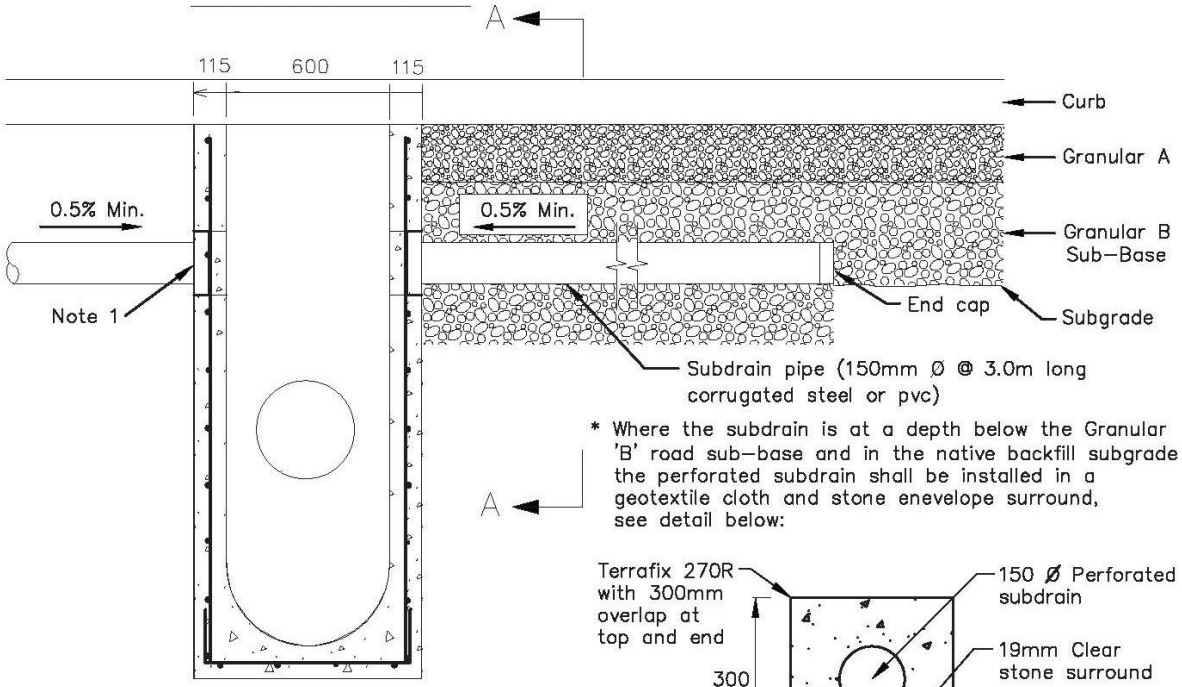

* Where the subdrain is at a depth below the Granular 'B' road sub–base and in the native backfill subgrade the perforated subdrain shall be installed in a geotextile cloth and stone enevelope surround, see detail below:

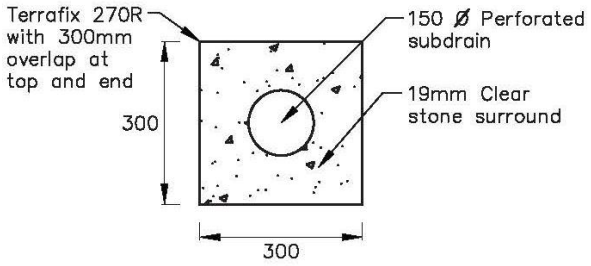

NOTES:

1. Subdrains to be installed on both sides of the catch basin at a 0.5% minimum grade into the catch basin. Subdrains to be installed into the 200mm knockout provided in the catch basin pot.
2. Subdrains – pipe subdrains shall consist of 6mm holes in four rows positioned at 4,5,7, and 8 o'clock and 75mm apart longitudinally in both materials or approved equivalent.

CITY OF LONDON STANDARD DRAWING

CATCH BASIN PIPE SUBDRAIN DETAIL

DWG	DATE	APPROVED BY
SW–3.1	2019 09 09	CITY ENGINEER

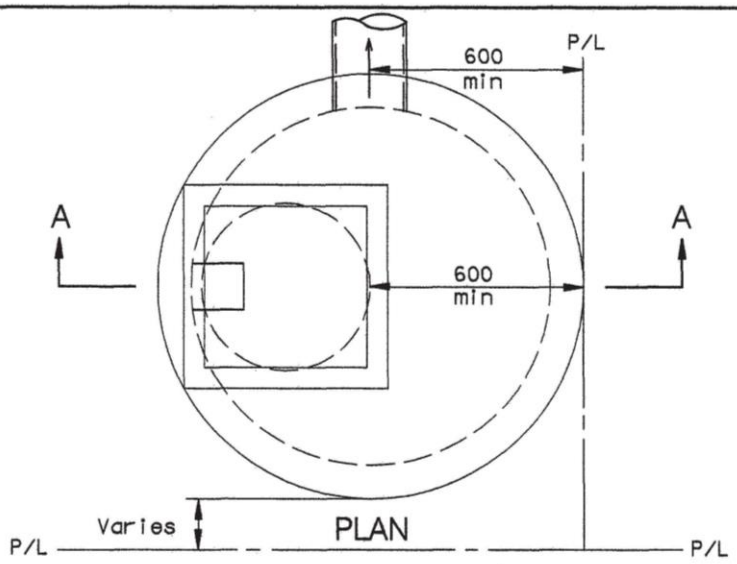

NOTES:

1. Outlet hole diameter = 400mm, located as required.
2. Adjustment units and components shall be installed as per OPSD 701.030 and City of London Standard Drawing SW-5.0
3. Class of concrete 30 MPA at 28 days
4. Refer to OPSD 400.02 for CATCH BASIN, CAST IRON FRAME AND FLAT SQUARE GRATE
5. All catchbasin maintenance hole leads and grates are to be located a minimum of 0.6m from the P/L.

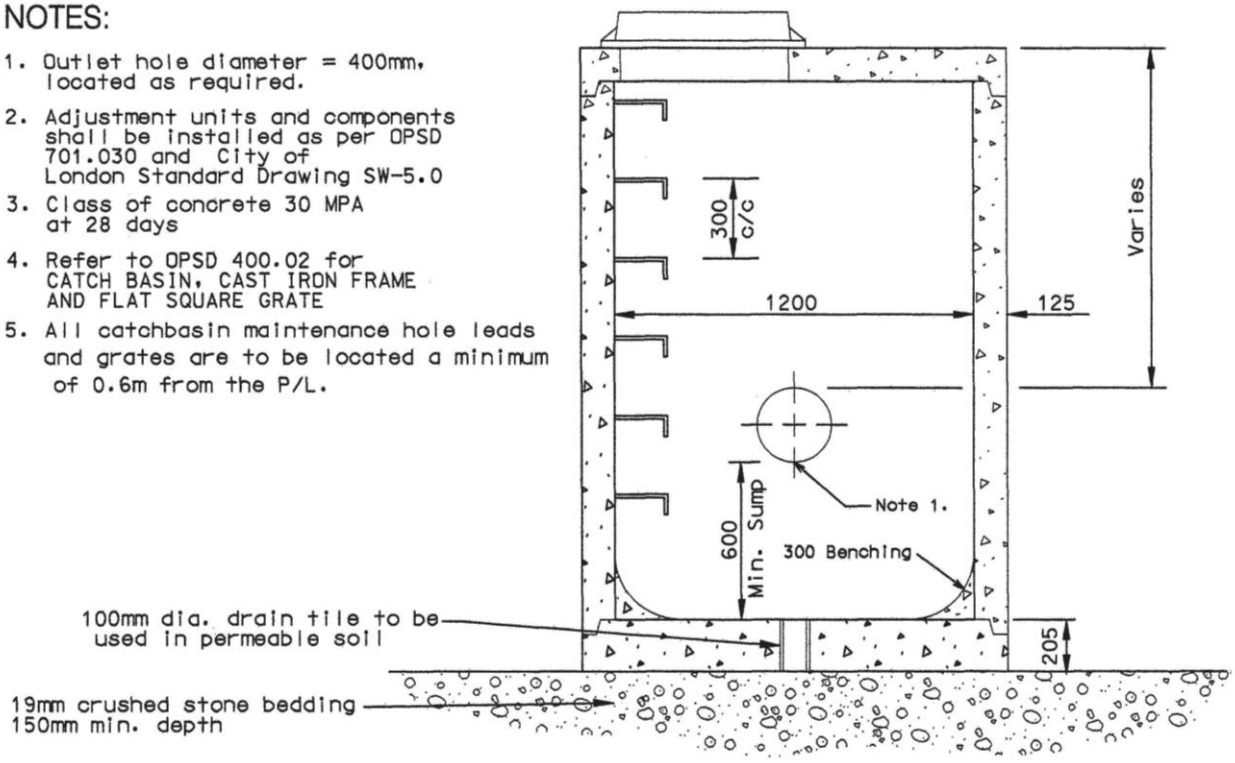

SECTION A–A

A. ALL DIMENSIONS ARE IN MILLIMETRES UNLESS OTHERWISE SHOWN.

CITY OF LONDON STANDARD DRAWING

PRECAST CONCRETE CATCH BASIN – MAINTENANCE HOLE

DWG	DATE	APPROVED BY CITY ENGINEER
SW-4.0	2002 03 20	

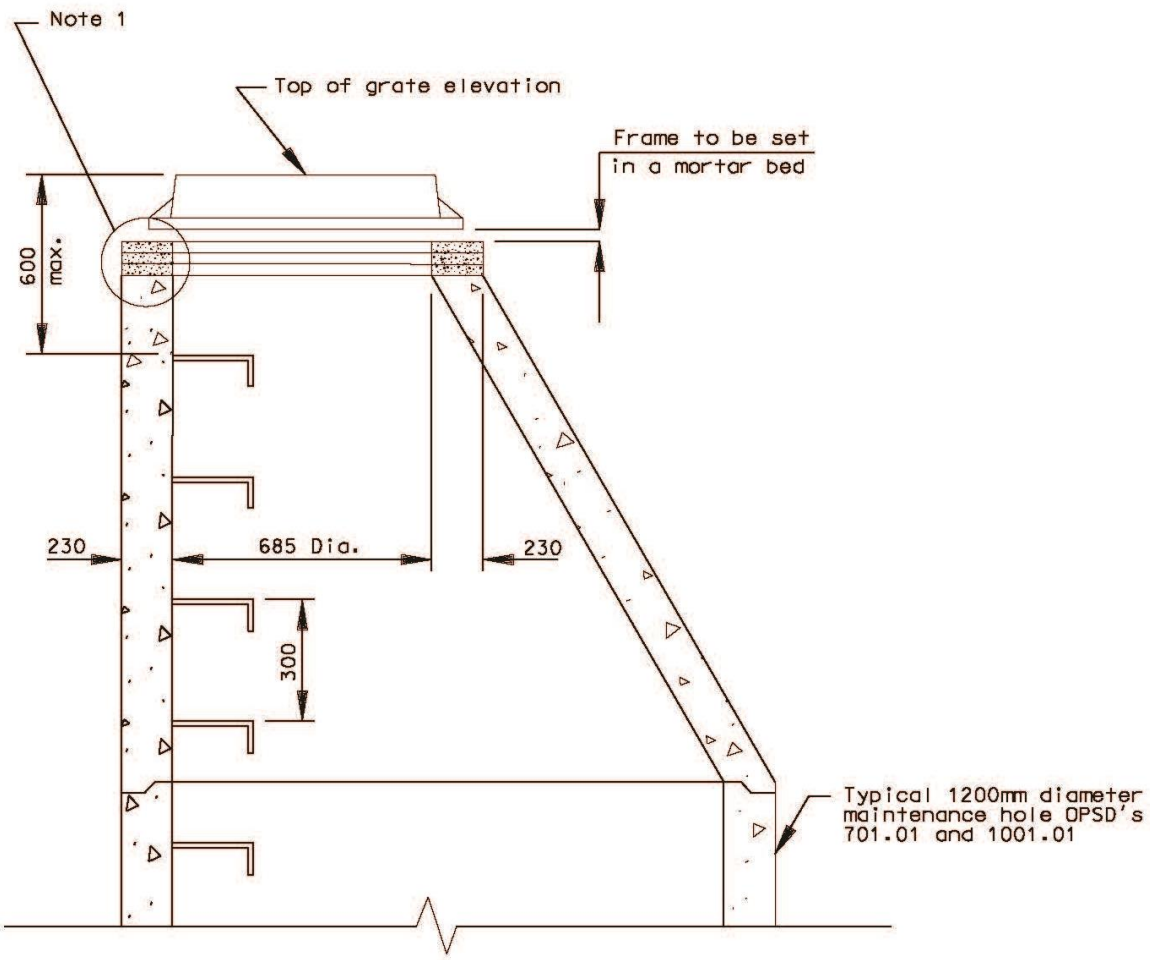

NOTES:

1. Adjustment units : Minimum of one (1) unit
   Maximum height 300mm
2. Steps are **NOT** permitted in the adjustment units

A. ALL DIMENSIONS ARE IN MILLIMETERS
UNLESS OTHERWISE SHOWN.

CITY OF LONDON STANDARD DRAWING

MAINTENANCE HOLE ADJUSTMENT UNIT DETAIL

DWG	DATE	APPROVED BY
SW-5.0	2013 08 15	CITY ENGINEER

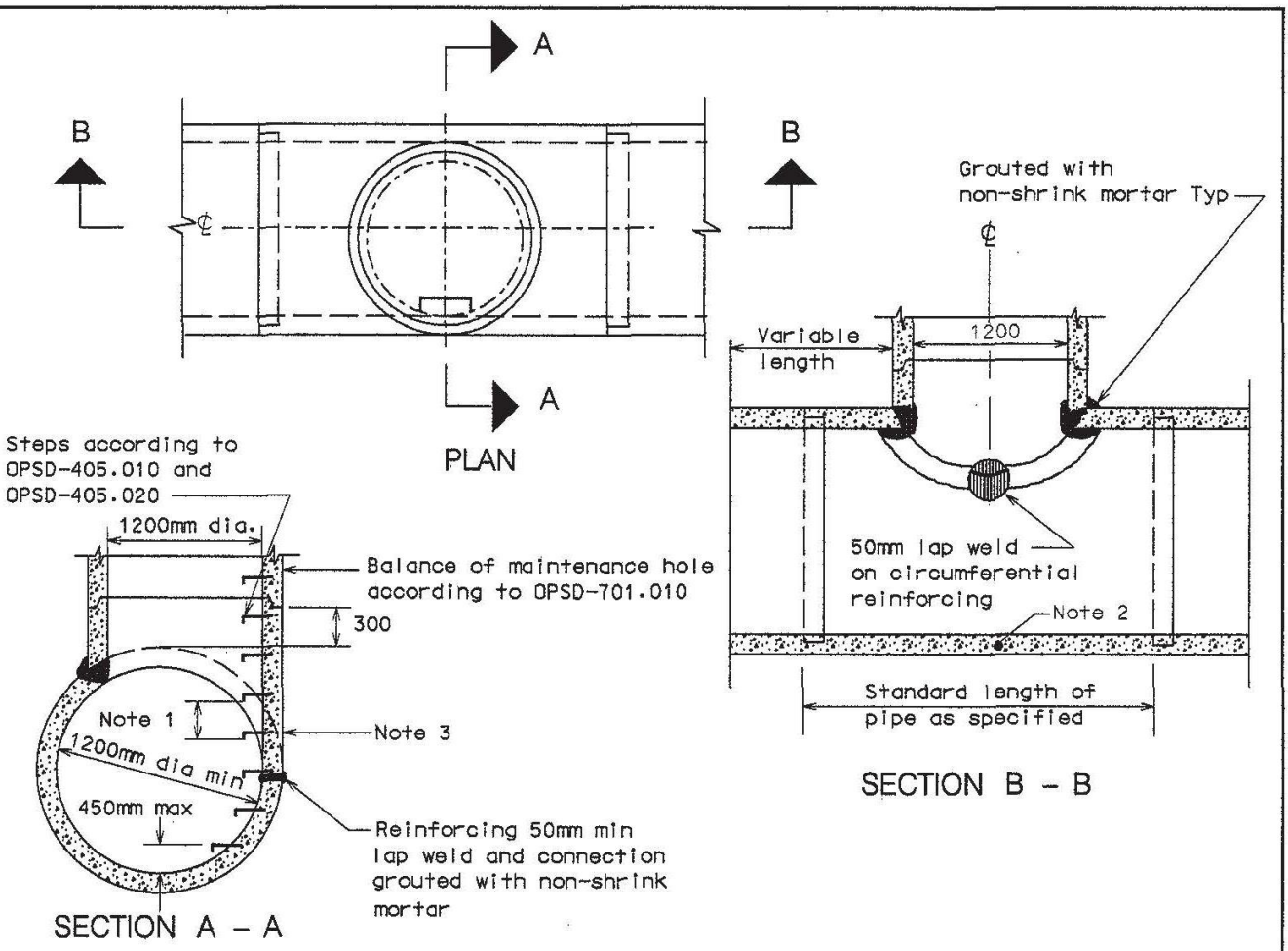

NOTES:

1 Spacing of maintenance hole steps to be 300mm c/c.
2 Sewer pipe accdording to CAN/CSA A-257.2, class to match that of higher class adjcent pipe.
3 Steps are required to within 450mm above the invert for storm sewers only.
4 No connections are to be constructed into maintenance hole tee's (ie sewers, C.B.'s and PDC's).
A Bedding for MH tee similar to pipe bedding either side of tee.
B Tee section bell or spigot as required.
C Granular backfill to be placed to a minimum thickness of 300mm all around the maintenance hole tee.
D Minimum steel in connection must equall area of steel in pipe.
E Sanitary maintenance hole tees require a safety landing within 1.5m of crown for testing, and maintenance operations.
F The minimum clearance between the safety landing (within 1.5M of crown) and the first safety landing above is a minimum 2.0m.
G All dimensions are nominal.
H All dimensions are in millimetres or metres unless otherwise shown.

CITY OF LONDON STANDARD DRAWING

PRECAST CONCRETE MAINTENANCE HOLE TEE DEPTH 10.0m MAX.

DWG	DATE	APPROVED BY CITY ENGINEER
SW-5.1	2003 01 17	per A. Leckie

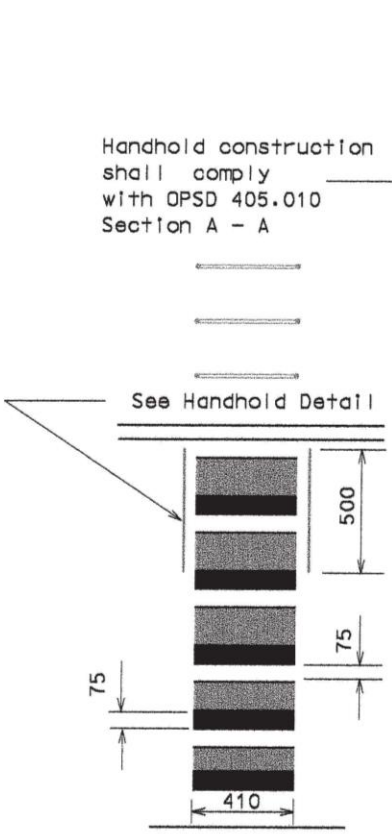

FACE VIEW

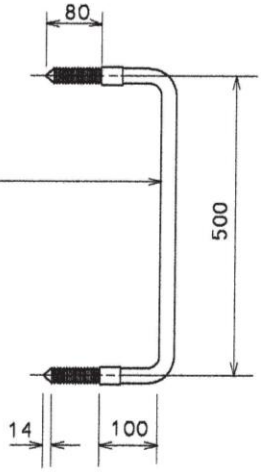

HANDHOLD
DETAIL 'A'

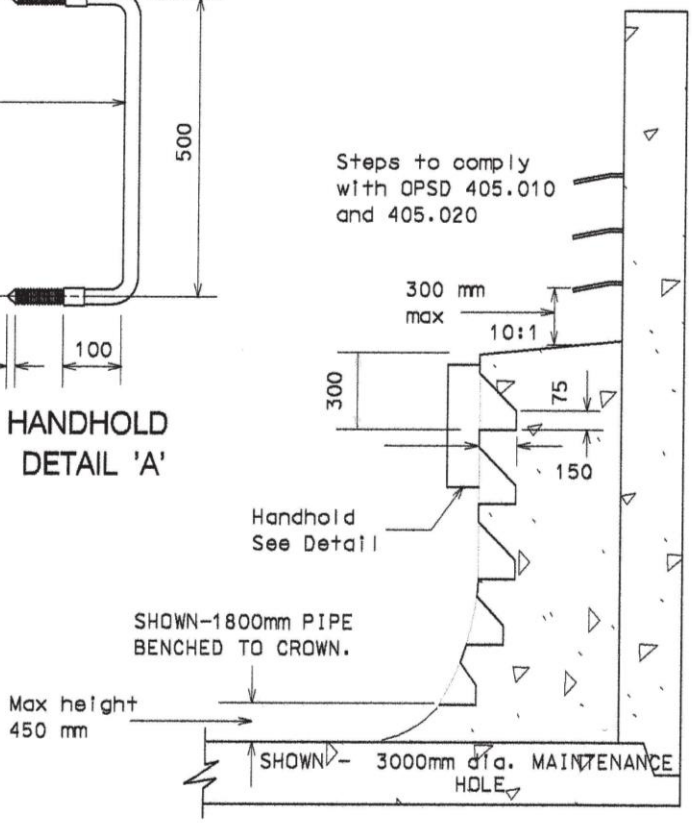

BENCHING SECTION

1. Steps are required in benching for pipe diameters
   a) Greater than 900mm – benching to springline.
   b) Greater than or equal to 450mm – benching to crown.
2. Handholds shall be constructed in accordance with DETAIL 'A'.
3. Handholds are required for pipe diameters greater than or equal to to 1500mm dia when benching to crown.
4. Additional handholds may be required for pipe diameters greater than 1950mm – benching to crown.
5. Step dimensions are typical
6. Maintenance hole steps shall be located to avoid conflict with an inletting or out letting sewer pipe. Access to maintenance hole must be above benching platform.

A. All dimensions are in millimetres unless otherwise shown.

CITY OF LONDON STANDARD DRAWING

STEPS IN MAINTENANCE HOLE BENCHING

DWG	DATE	APPROVED BY CITY ENGINEER
SW-5.2	2000 02 29	

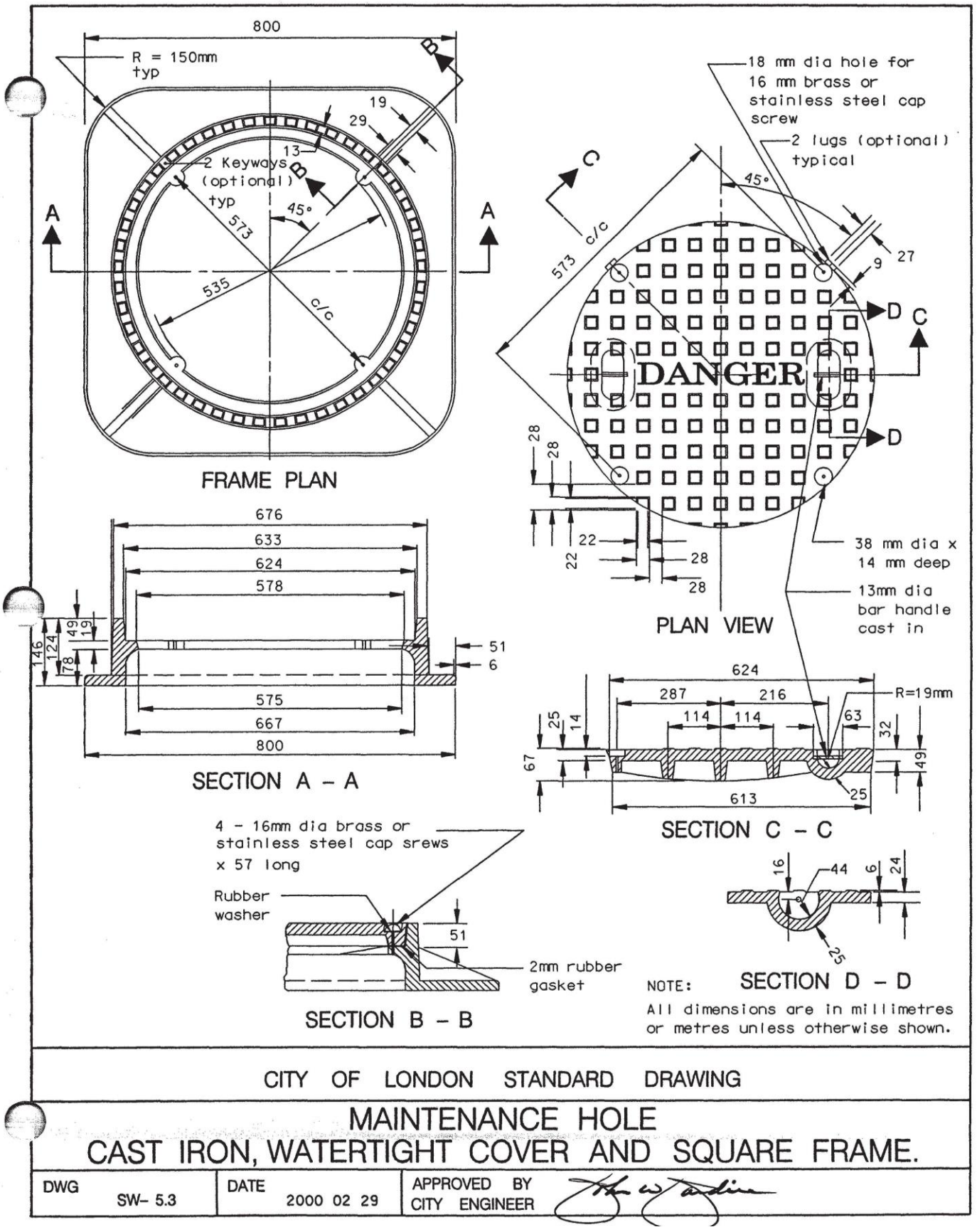

CITY OF LONDON STANDARD DRAWING

MAINTENANCE HOLE
CAST IRON, WATERTIGHT COVER AND SQUARE FRAME.

DWG	DATE	APPROVED BY CITY ENGINEER
SW– 5.3	2000 02 29	

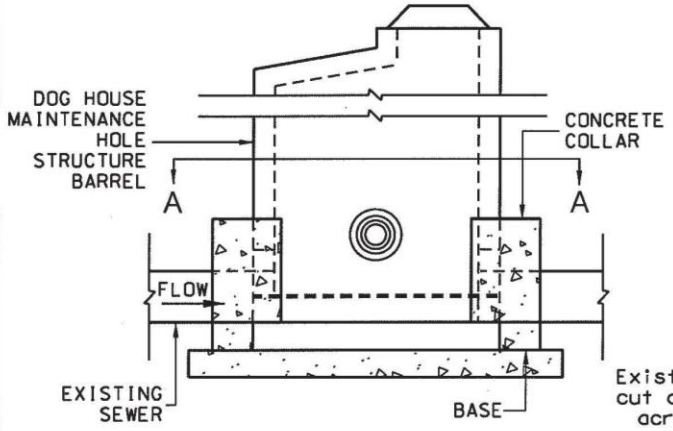

"DOG HOUSE" MAINTENANCE HOLE PROFILE

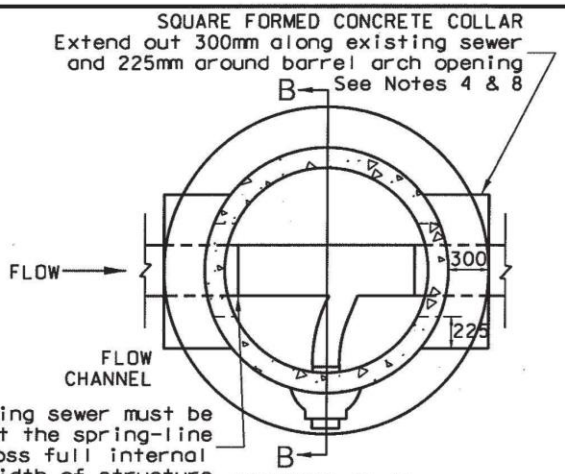

SECTION 'A-A'

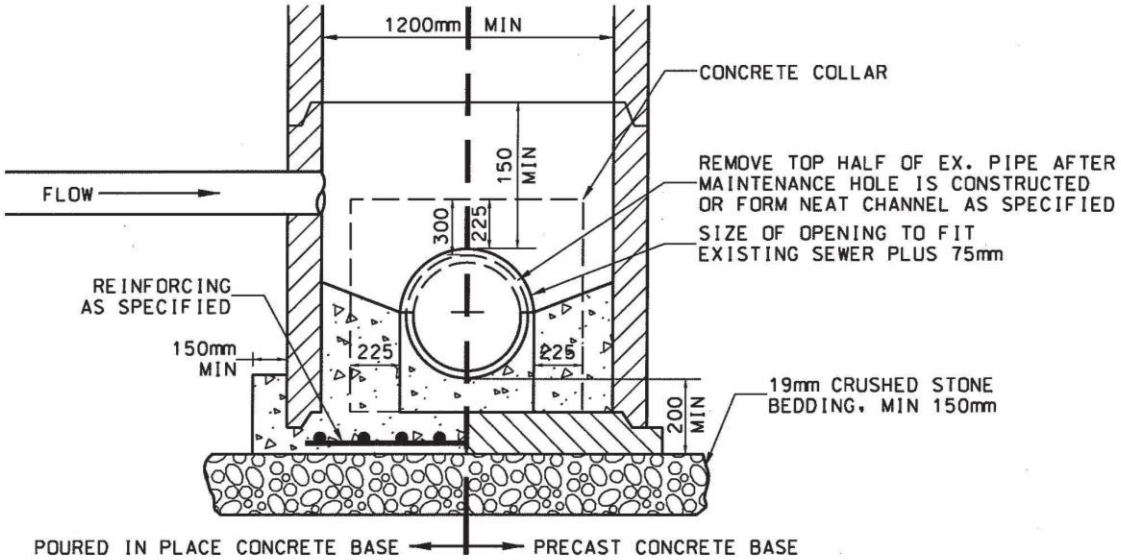

SECTION 'B-B'

NOTES

1. The doghouse maintenance hole may only be used for placing a new maintenance hole on an existing sanitary or storm line when installation of a standard maintenance hole is not practical.
2. All maintenance hole components are to meet OPSD 701.
3. All benching is to meet OPSD 701.21.
4. All poured in place concrete to be 30 MPa.
5. Concrete bonding agent must be applied to all interfaces of precast to cast-in-place concrete.
6. Full time inspection shall be provided by the consulting engineer during installation of this structure and the consultant shall provide written certification of installation to the City of London. The structure must not be backfilled for minimum 24 hr after construction to allow for secondary inspection as required
7. The top of the existing mainline sewer must be fully removed from springline across the full internal width of the structure.
8. A curved internal arch form must be used during collar concrete fill. No brick, mortar or debris is to be used in place of consolidated concrete around the pipe or in the collar. The collar, under pipe fill and benching must be constructed in one continuous pour.

CITY OF LONDON STANDARD DRAWING

SANITARY SEWER
'DOG HOUSE' MAINTENANCE HOLE

DWG	DATE	APPROVED BY CITY ENGINEER
SW- 5.4	2012 09 14	per

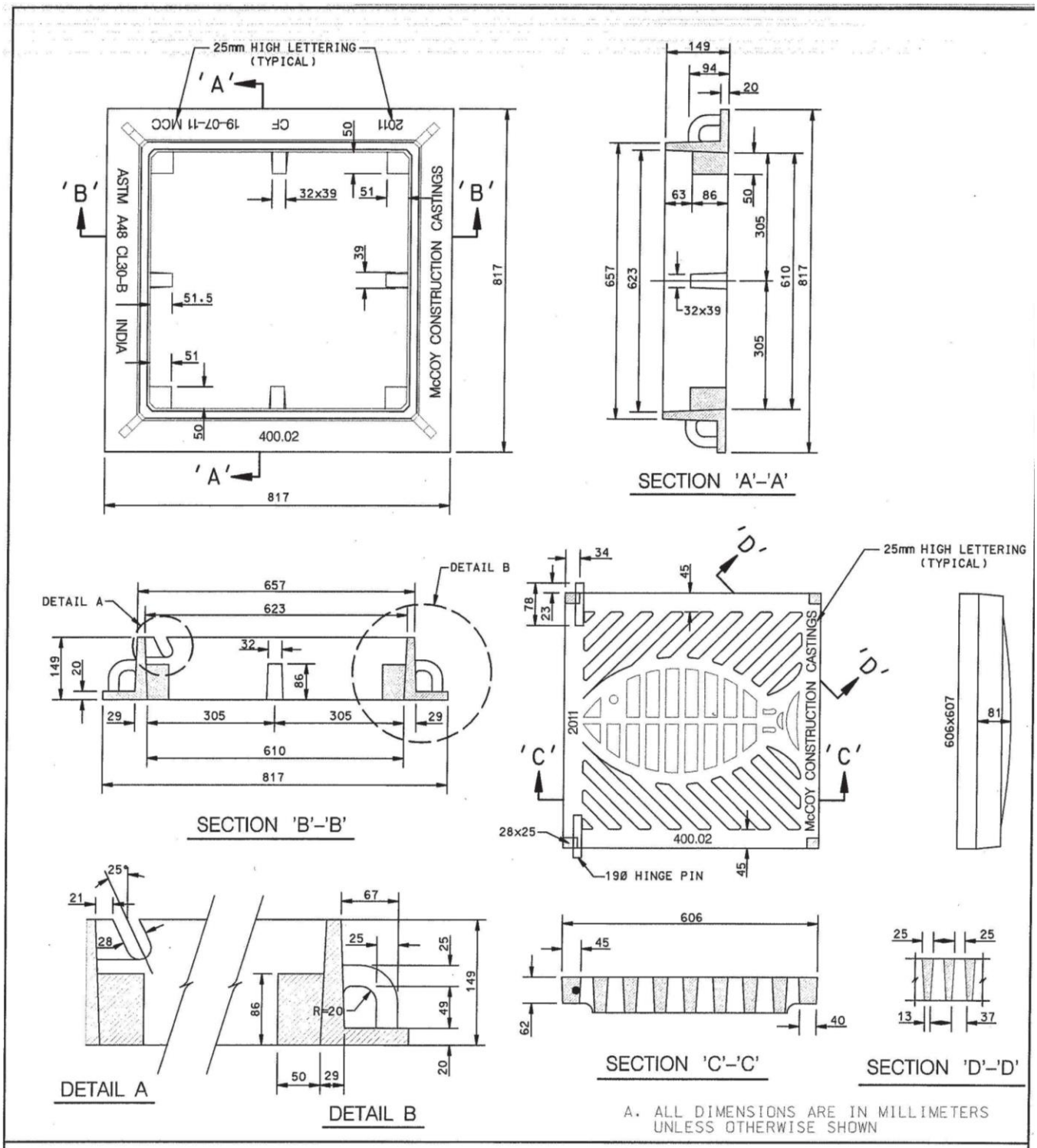
25mm HIGH LETTERING (TYPICAL)
'A'
'B'
ASTM A48 CL30-B INDIA
McCOY CONSTRUCTION CASTINGS
19-07-11 MCC
CF
2011
32x39
51
39
51.5
400.02
817
SECTION 'A'–'A'
SECTION 'B'–'B'
DETAIL A
DETAIL B
'C'
'D'
28x25
190 HINGE PIN
606x607
SECTION 'C'–'C'
SECTION 'D'–'D'
A. ALL DIMENSIONS ARE IN MILLIMETERS UNLESS OTHERWISE SHOWN
CITY OF LONDON STANDARD DRAWING
CATCH BASIN FRAME AND GRATE
'FISH GRATE'
DWG SW– 5.5
DATE 2012 11 12
APPROVED BY CITY ENGINEER

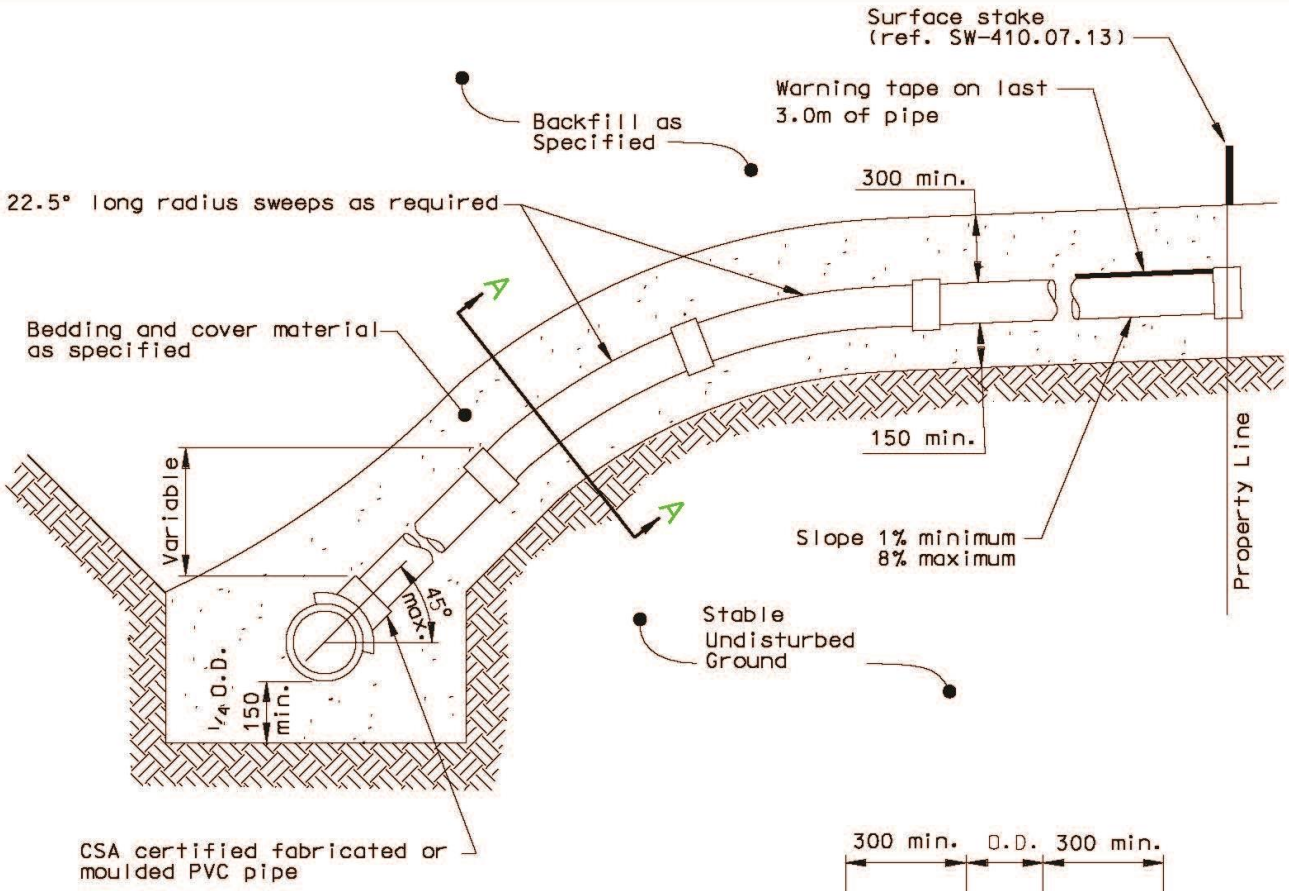

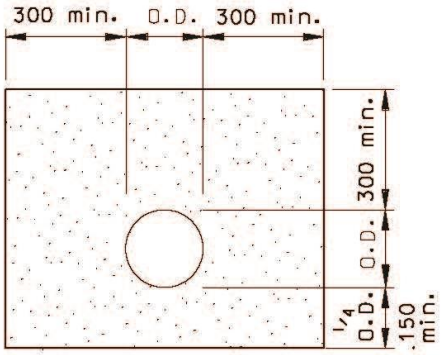

SECTION A – A

NOTES:

1. PDC risers are required for sewer depths greater than or equal to 4.5m (see drawings SW-6.1 and SW-6.2 for details)
2. The minimum inside diameter for Sanitary and Storm P.D.C.'s is 100mm
3. The minimum clearance between a P.D.C. and a sewer or watermain (outside wall to outside wall) is 150mm
4. Pre fabricated tees shall be used for all service connections on new sewer main construction, including sewer mains for new subdivisions prior to assumption.

   Saddle connections may be used when connecting new services to an existing sewer main with the approval of the Contract Administrator.
5. No sanitary pdc connections to maintenance holes are permitted. Where horizontal or vertical bends are required long radius sweeps shall be used. Short bends are not acceptable.
6. Sanitary PDC end caps are to be water tight and capable of withstanding test pressures.

A. ALL DIMENSIONS ARE IN MILLIMETERS UNLESS OTHERWISE SHOWN.

CITY OF LONDON STANDARD DRAWING

PRIVATE DRAIN CONNECTION

DWG	DATE	APPROVED BY
SW-6.0	2013 11 01	CITY ENGINEER

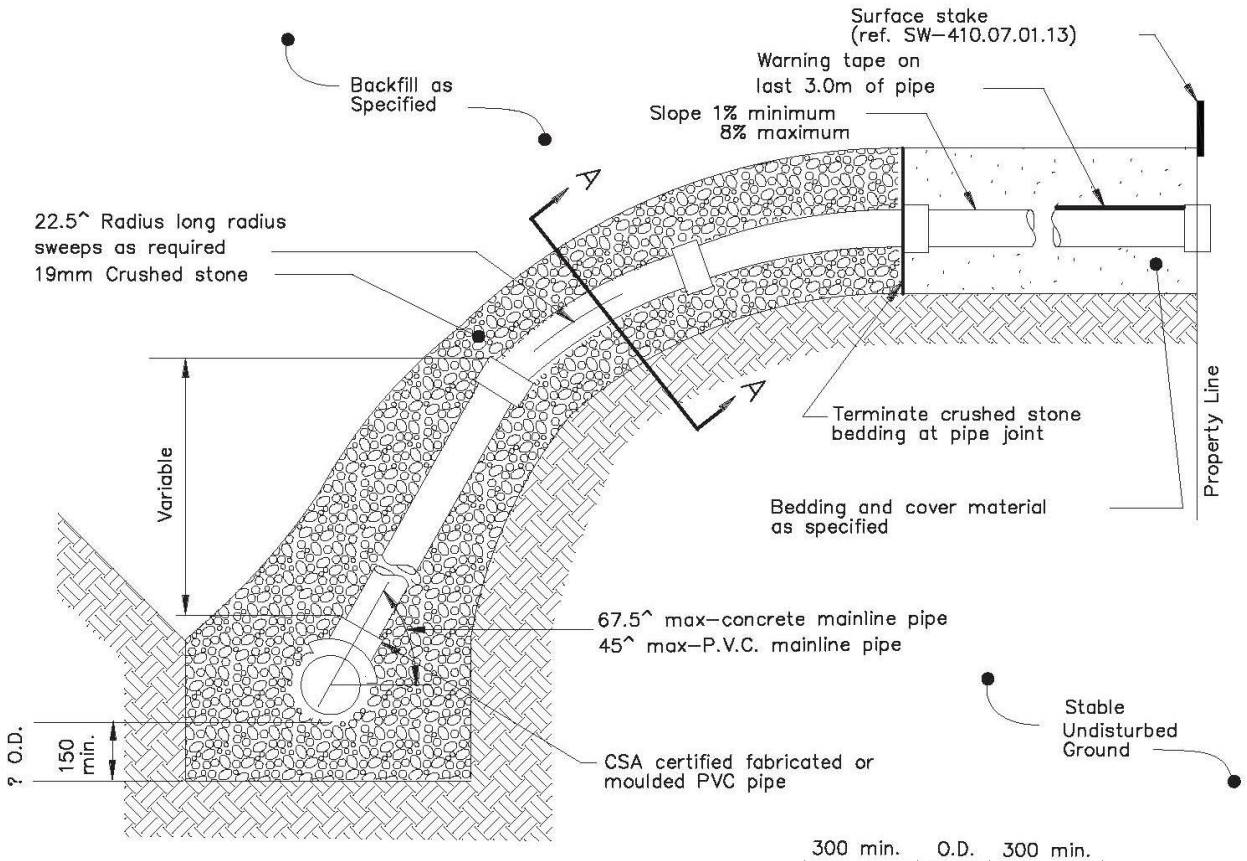

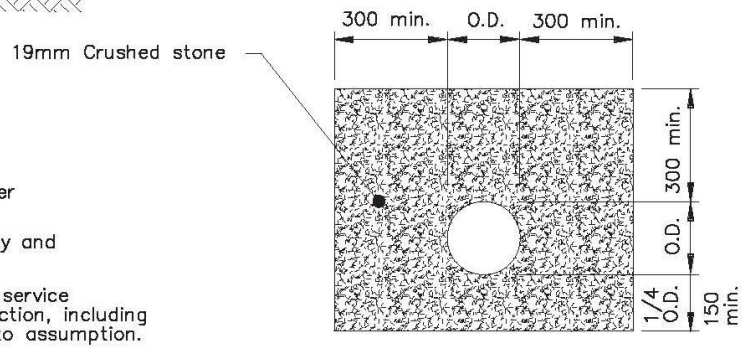

SECTION A – A

NOTES:

1. A Type 1 P.D.C. riser is required for sewer depths greater than or equal to 4.5m from finished road grade, and for excavations in stable bank conditions. (see drawing SW–6.0 for sewer depths of less than 4.5m)
2. The minimum inside diameter for Sanitary and Storm P.D.C.'s is 100mm
3. Prefabricated tees shall be used for all service connections on new sewer main construction, including sewer mains for new subdivisions prior to assumption.

   Saddle connections may be used when connecting new services to an existing sewer main with the approval of the Contract Administrator.
4. No sanitary pdc connections to maintenance holes are permitted.
5. Where horizontal or vertical bends are required long radius sweeps shall be used. Short bends are not acceptable.
6. Sanitary PDC end caps are to be water tight and capable of withstanding test pressures.

A. ALL DIMENSIONS ARE IN MILLIMETRES UNLESS OTHERWISE SHOWN.

CITY OF LONDON STANDARD DRAWING

PRIVATE DRAIN CONNECTION RISER – Type 1

67.5° MAXIMUM CONCRETE PIPE, 45° MAXIMUM PVC – STABLE BANK CONDITIONS

DWG	DATE	APPROVED BY
SW–6.1	2019 09 09	CITY ENGINEER

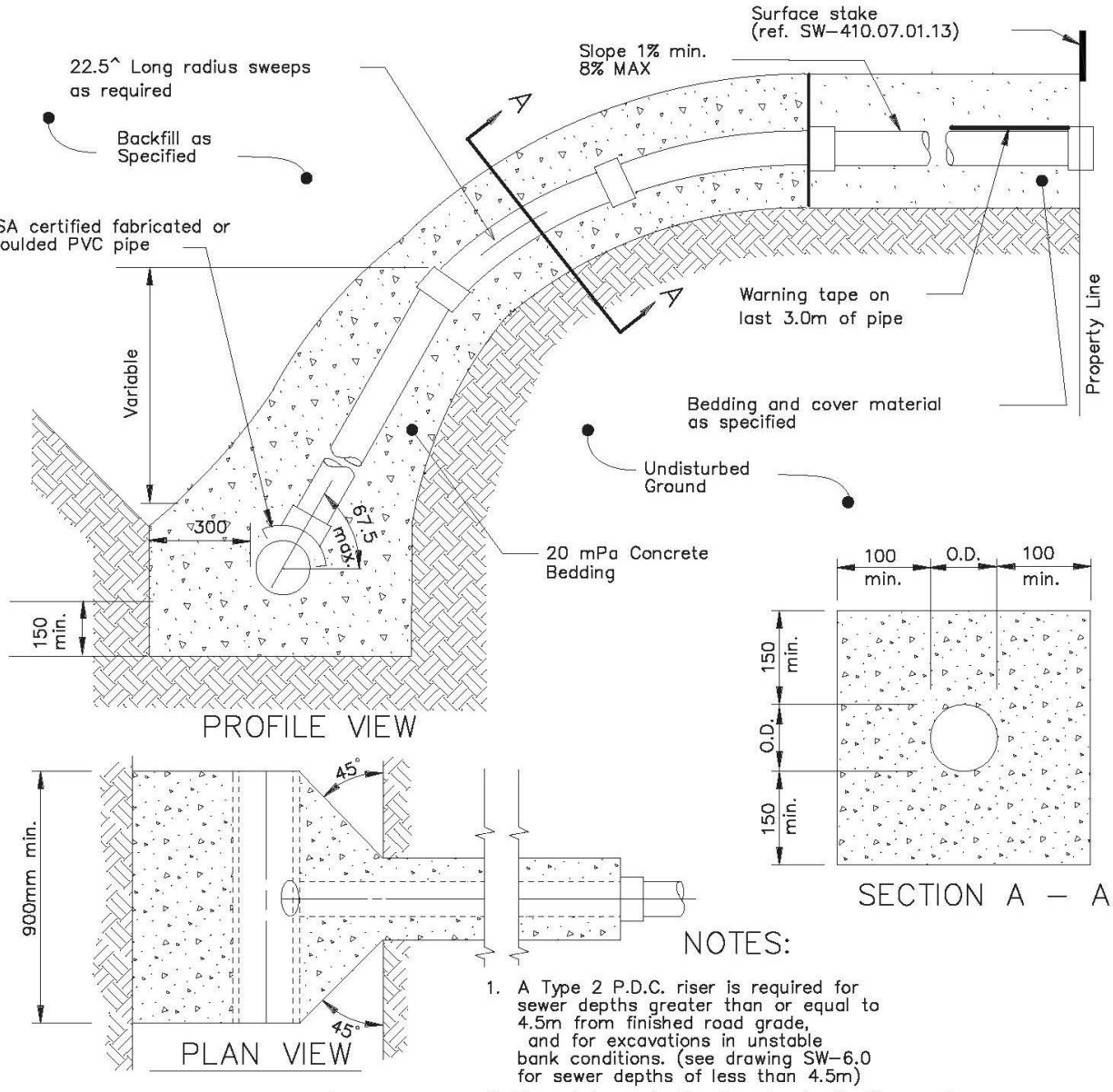

NOTES:

1. A Type 2 P.D.C. riser is required for sewer depths greater than or equal to 4.5m from finished road grade, and for excavations in unstable bank conditions. (see drawing SW-6.0 for sewer depths of less than 4.5m)
2. The minimum inside diameter for Sanitary and Storm P.D.C.'s is 100mm
3. Prefabricated tees shall be used for all service connections on new sewer main construction, including sewer mains for new subdivisions prior to assumption. Saddle connections may be used when connecting new services to an existing sewer main with the approval of the Contract Administrator.
4. Concrete strength shall be 20 MPA.
5. Where hor. or vert. bends are Reg'd, long radius sweeps shall be used. Short bends are not acceptable.
6. No sanitary pdc connections to maintenance holes are permitted.
7. Sanitary PDC end caps are to be water tight and capable of withstanding test pressures.

CITY OF LONDON STANDARD DRAWING

PRIVATE DRAIN CONNECTION RISER – Type 2
67.5° MAXIMUM – UNSTABLE BANK CONDITIONS

DWG	DATE	APPROVED BY
SW-6.2	2019 09 09	CITY ENGINEER

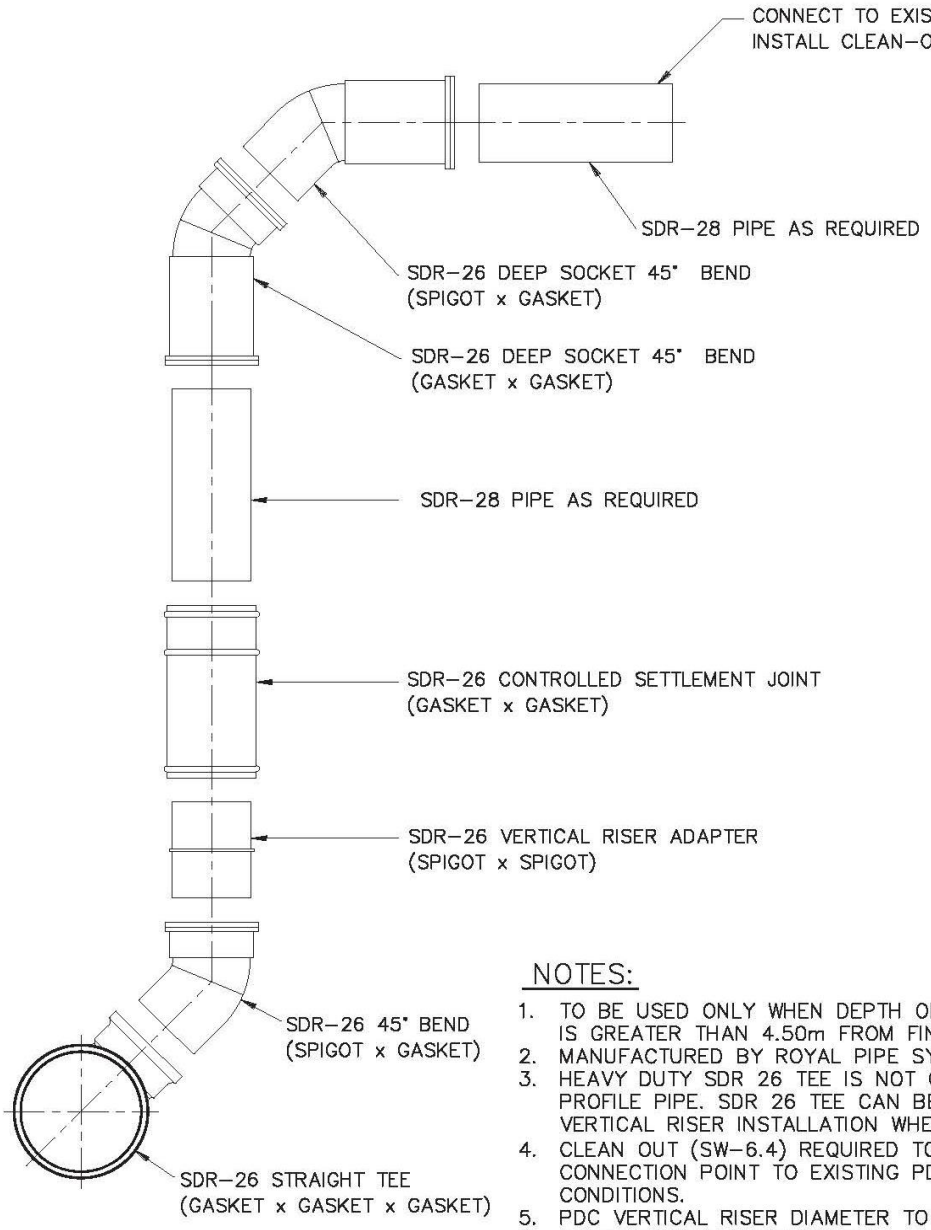

NOTES:

1. TO BE USED ONLY WHEN DEPTH OF SANITARY SEWER IS GREATER THAN 4.50m FROM FINISHED ROAD GRADE.
2. MANUFACTURED BY ROYAL PIPE SYSTEMS.
3. HEAVY DUTY SDR 26 TEE IS NOT COMPATIBLE WITH PROFILE PIPE. SDR 26 TEE CAN BE OMITTED FROM THE VERTICAL RISER INSTALLATION WHEN USING PROFILE PIPE.
4. CLEAN OUT (SW-6.4) REQUIRED TO BE INSTALLED AT CONNECTION POINT TO EXISTING PDC IN RETRO FIT CONDITIONS.
5. PDC VERTICAL RISER DIAMETER TO BE 150mm.
6. BEDDING SYSTEM PER SW-6.1.
7. WHERE DEPTH OF PDC DOES NOT ALLOW FOR THE USE OF THIS STYLE PDC VERTICAL RISER A TYPE 1 (SW-6.1) OR TYPE 2 (SW-6.2) PDC RISER CONNECTION COULD BE PERMITTED AS APPROVED BY THE CONTRACT ADMINISTRATOR.

CITY OF LONDON STANDARD DRAWING

PDC VERTICAL RISER INSTALLATION

DWG	DATE	APPROVED BY
SW-6.3	2019 09 09	CITY ENGINEER

1. The pipe diameter of the cleanout pipe shall equal the pipe diameter of the P.D.C.
2. The minimum inside diameter for sanitary P.D.C. cleanout is 100mm.
3. Approved prefabricated wyes and long radius sweeps shall be used for all P.D.C. cleanout connections.
4. Where applicable, approved end caps are required at property line to complete the P.D.C. installation. They shall be braced to withstand pressure testing when required.

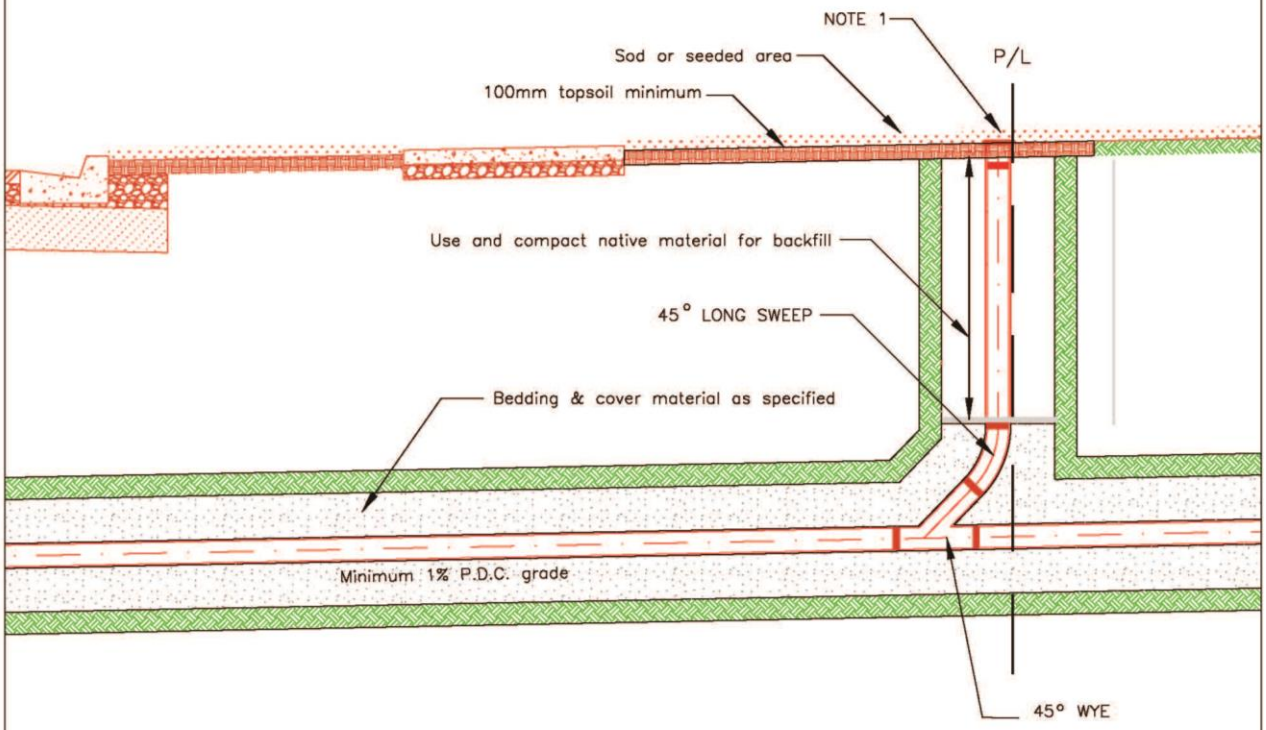

Note 1
a) Cleanout Hard (Rigid) Surface Installation: Use cast iron cap and intall flush with surface.
Cleanout 4" – EMCO#DF44 – SKU 6463049
Cleanout 6" – EMCO#DF66 – SKU 6463052

b) Cleanout Gravel Surface Installation: Use cast iron cap per a), install 75mm below finished grade.

c) Cleanout Soft Surface (Grass) Installation: Use standard plastic cap, with peak flush with grass surface.
4" bds threaded adapter EMCO#SKU 6012213
4" bds threaded plug EMCO#SKU 6015263
6" bds threaded adapter EMCO#SKU 6010059
6" bds threaded plug EMCO#SKU 6010084

CITY OF LONDON STANDARD DRAWING

PRIVATE DRAIN CONNECTION CLEANOUTS

DWG NO: ~~SW-6.4~~	DATE 2013 08 15	APPROVED BY CITY ENGINEER

JUSTIN LAURENCE

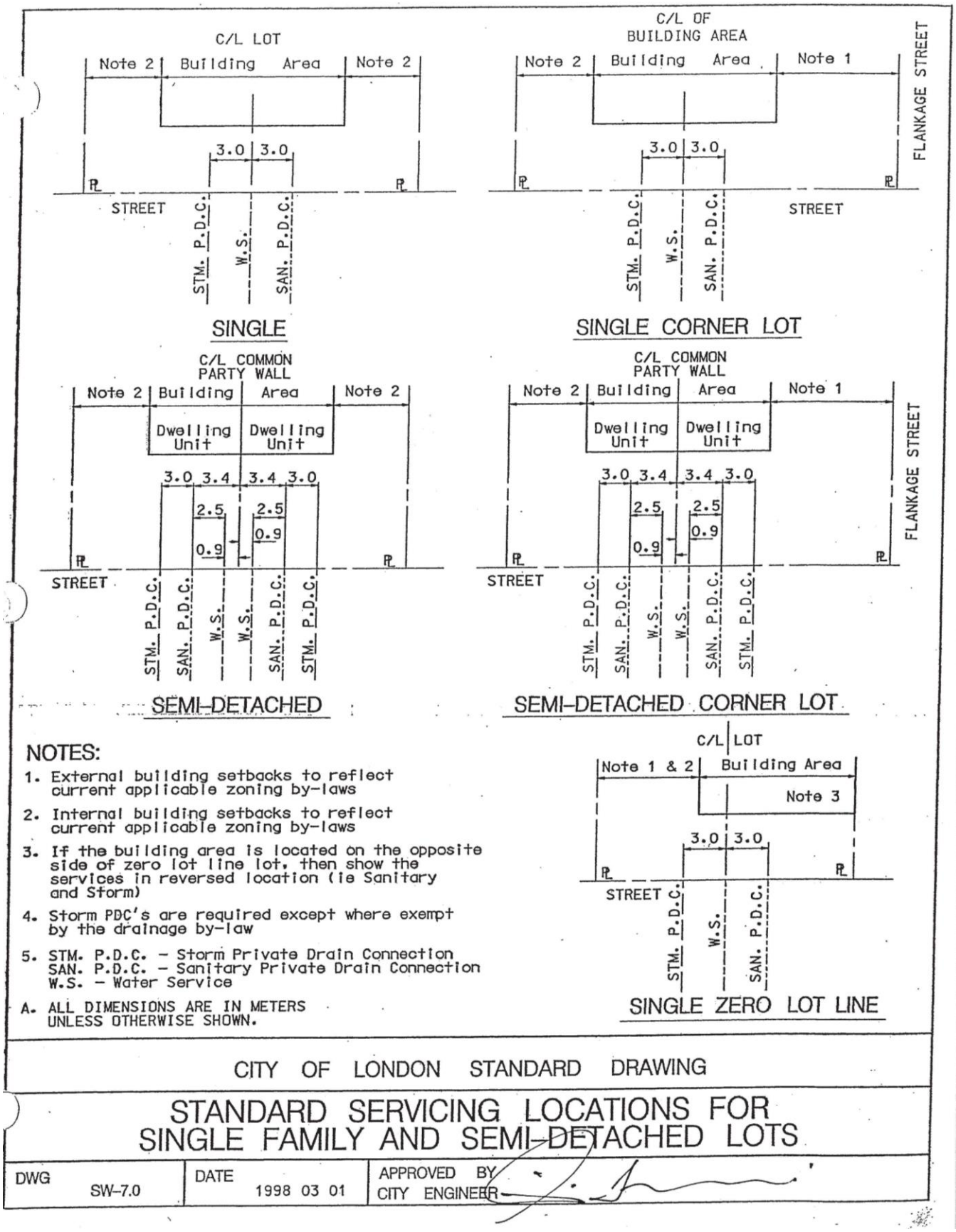
C/L LOT
Note 2
Building Area
Note 2
3.0
3.0
STREET
STM. P.D.C.
W.S.
SAN. P.D.C.
SINGLE
C/L OF BUILDING AREA
Note 2
Building Area
Note 1
FLANKAGE STREET
SINGLE CORNER LOT
C/L COMMON PARTY WALL
Dwelling Unit
Dwelling Unit
3.0 3.4 3.4 3.0
2.5
0.9
SEMI-DETACHED
SEMI-DETACHED CORNER LOT
NOTES:
1. External building setbacks to reflect current applicable zoning by-laws
2. Internal building setbacks to reflect current applicable zoning by-laws
3. If the building area is located on the opposite side of zero lot line lot, then show the services in reversed location (ie Sanitary and Storm)
4. Storm PDC's are required except where exempt by the drainage by-law
5. STM. P.D.C. - Storm Private Drain Connection
SAN. P.D.C. - Sanitary Private Drain Connection
W.S. - Water Service
A. ALL DIMENSIONS ARE IN METERS UNLESS OTHERWISE SHOWN.
C/L LOT
Note 1 & 2
Building Area
Note 3
SINGLE ZERO LOT LINE
CITY OF LONDON STANDARD DRAWING
STANDARD SERVICING LOCATIONS FOR SINGLE FAMILY AND SEMI-DETACHED LOTS
DWG SW-7.0
DATE 1998 03 01
APPROVED BY CITY ENGINEER

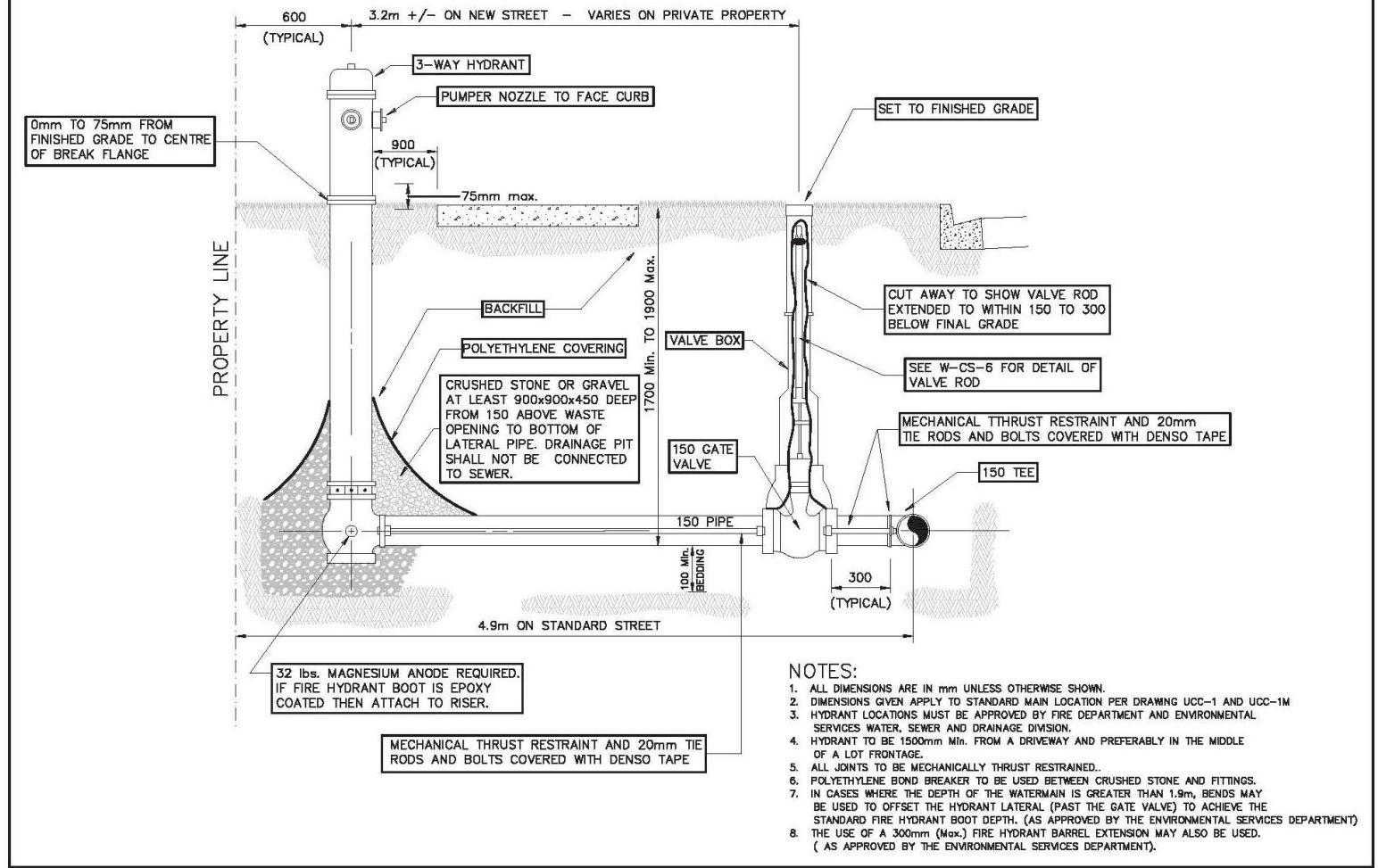

NOTES:

1. ALL DIMENSIONS ARE IN mm UNLESS OTHERWISE SHOWN.
2. DIMENSIONS GIVEN APPLY TO STANDARD MAIN LOCATION PER DRAWING UCC-1 AND UCC-1M
3. HYDRANT LOCATIONS MUST BE APPROVED BY FIRE DEPARTMENT AND ENVIRONMENTAL SERVICES WATER, SEWER AND DRAINAGE DIVISION.
4. HYDRANT TO BE 1500mm Min. FROM A DRIVEWAY AND PREFERABLY IN THE MIDDLE OF A LOT FRONTAGE.
5. ALL JOINTS TO BE MECHANICALLY THRUST RESTRAINED..
6. POLYETHYLENE BOND BREAKER TO BE USED BETWEEN CRUSHED STONE AND FITTINGS.
7. IN CASES WHERE THE DEPTH OF THE WATERMAIN IS GREATER THAN 1.9m, BENDS MAY BE USED TO OFFSET THE HYDRANT LATERAL (PAST THE GATE VALVE) TO ACHIEVE THE STANDARD FIRE HYDRANT BOOT DEPTH. (AS APPROVED BY THE ENVIRONMENTAL SERVICES DEPARTMENT)
8. THE USE OF A 300mm (Max.) FIRE HYDRANT BARREL EXTENSION MAY ALSO BE USED. (AS APPROVED BY THE ENVIRONMENTAL SERVICES DEPARTMENT).

CITY OF LONDON STANDARD DRAWING

HYDRANT AND VALVE INSTALLATION

DWG: W-CS-1 SHT. 1	DATE 2019 09 09	APPROVED BY CITY ENGINEER:	NTS

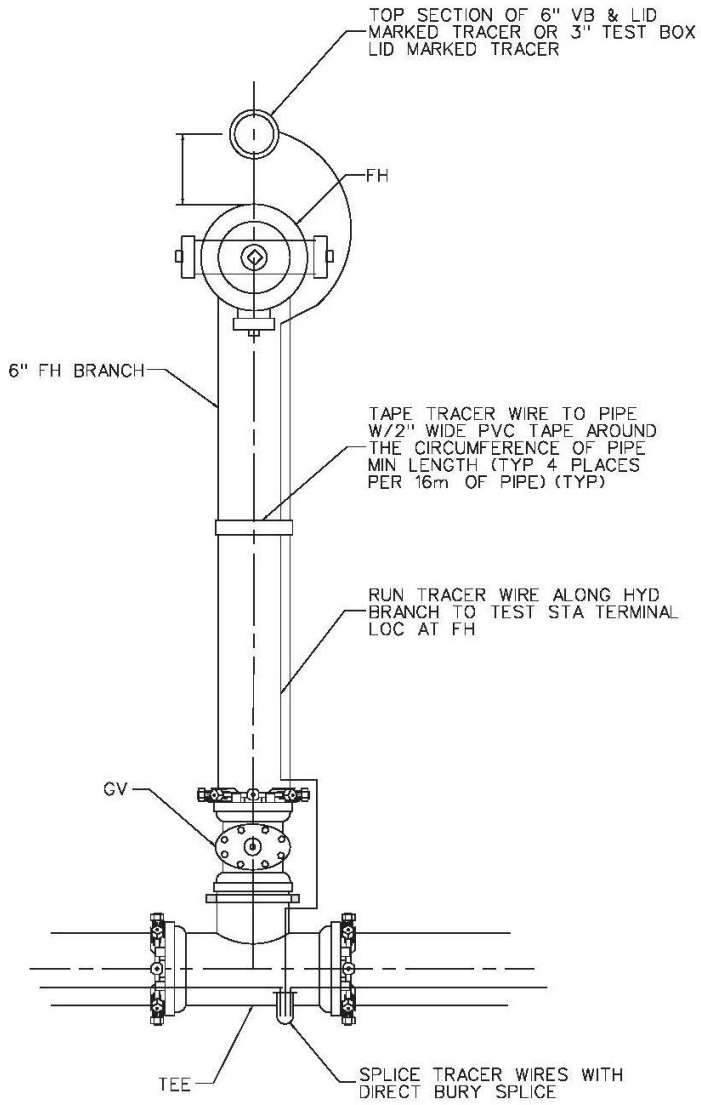

FIRE HYDRANT

PLAN VIEW

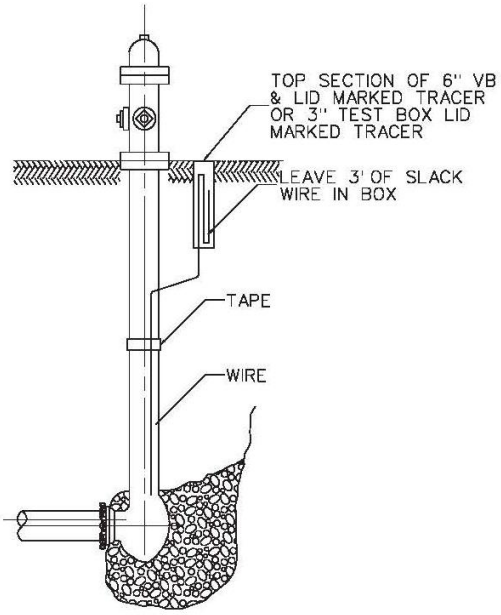

ELEVATION

CITY OF LONDON STANDARD DRAWING

TRACER WIRE INSTALLATION

DWG: W-CS-1 SHT. 2	DATE 2014 09 24	APPROVED BY CITY ENGINEER:	NTS

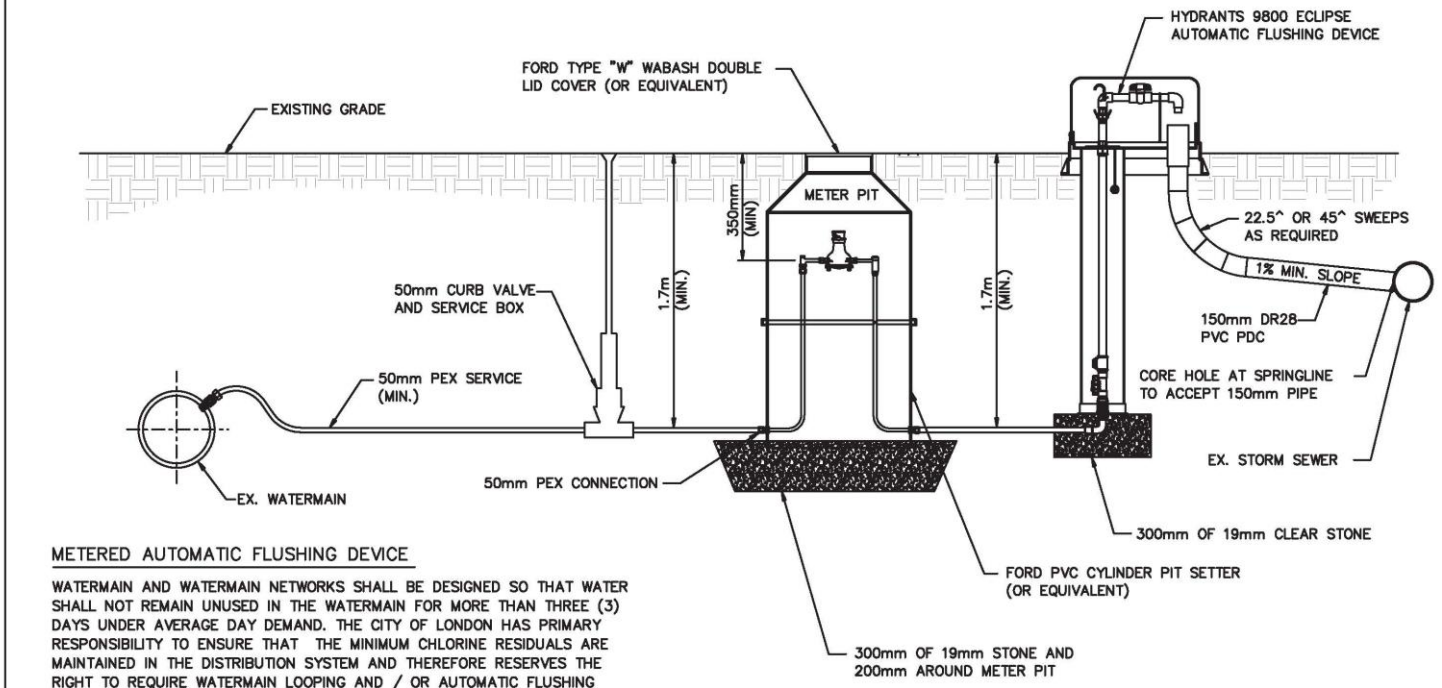

METERED AUTOMATIC FLUSHING DEVICE

WATERMAIN AND WATERMAIN NETWORKS SHALL BE DESIGNED SO THAT WATER SHALL NOT REMAIN UNUSED IN THE WATERMAIN FOR MORE THAN THREE (3) DAYS UNDER AVERAGE DAY DEMAND. THE CITY OF LONDON HAS PRIMARY RESPONSIBILITY TO ENSURE THAT THE MINIMUM CHLORINE RESIDUALS ARE MAINTAINED IN THE DISTRIBUTION SYSTEM AND THEREFORE RESERVES THE RIGHT TO REQUIRE WATERMAIN LOOPING AND / OR AUTOMATIC FLUSHING DEVICES AND / OR BLOW-OFFS TO FACILITATE THE MAINTENANCE OF THE CHLORINE RESIDUAL.

SEE DESIGN SPECIFICATIONS AND REQUIREMENTS SECTION 745.7 LIMITATIONS ON LOCATIONS WHERE AUTOMATIC FLUSHING DEVICES CAN BE USED.

WATER METER PITS ARE TO BE IN ACCORDANCE WITH THE SECTION 441.05.22 OF THE CITY OF LONDON STANDARD CONTRACT DOCUMENTS FOR MUNICIPAL CONSTRUCTION PROJECTS AND THE MANUFACTURER'S RECOMMENDATIONS.

AUTOMATIC FLUSHING DEVICES ARE TO BE IN ACCORDANCE WITH THE SECTION 441.05.18 OF THE CITY OF LONDON STANDARD CONTRACT DOCUMENTS FOR MUNICIPAL CONSTRUCTION PROJECTS AND THE MANUFACTURER'S RECOMMENDATIONS.

THE 9800 ECLIPSE AUTOMATIC FLUSHING DEVICE IS AVAILABLE WITH 25mm OR 50mm DISCHARGES. BOTH SIZES ARE ACCEPTABLE FOR USE, HOWEVER, THE DESIGNER SHALL SELECT THE APPROPRIATE SIZING FOR THE SPECIFIC APPLICATION INDICATE SIZING. WHERE A 25mm AUTO-FLUSHING DEVICES IS USED, THE CONNECTION AND METER SIZE MAY BE 25mm AS WELL.

CITY OF LONDON STANDARD DRAWING

METERED AUTOMATIC FLUSHING DEVICE

DWG	DATE	APPROVED BY CITY ENGINEER	
W-CS-2 SHEET 1	2017 08 31		NTS

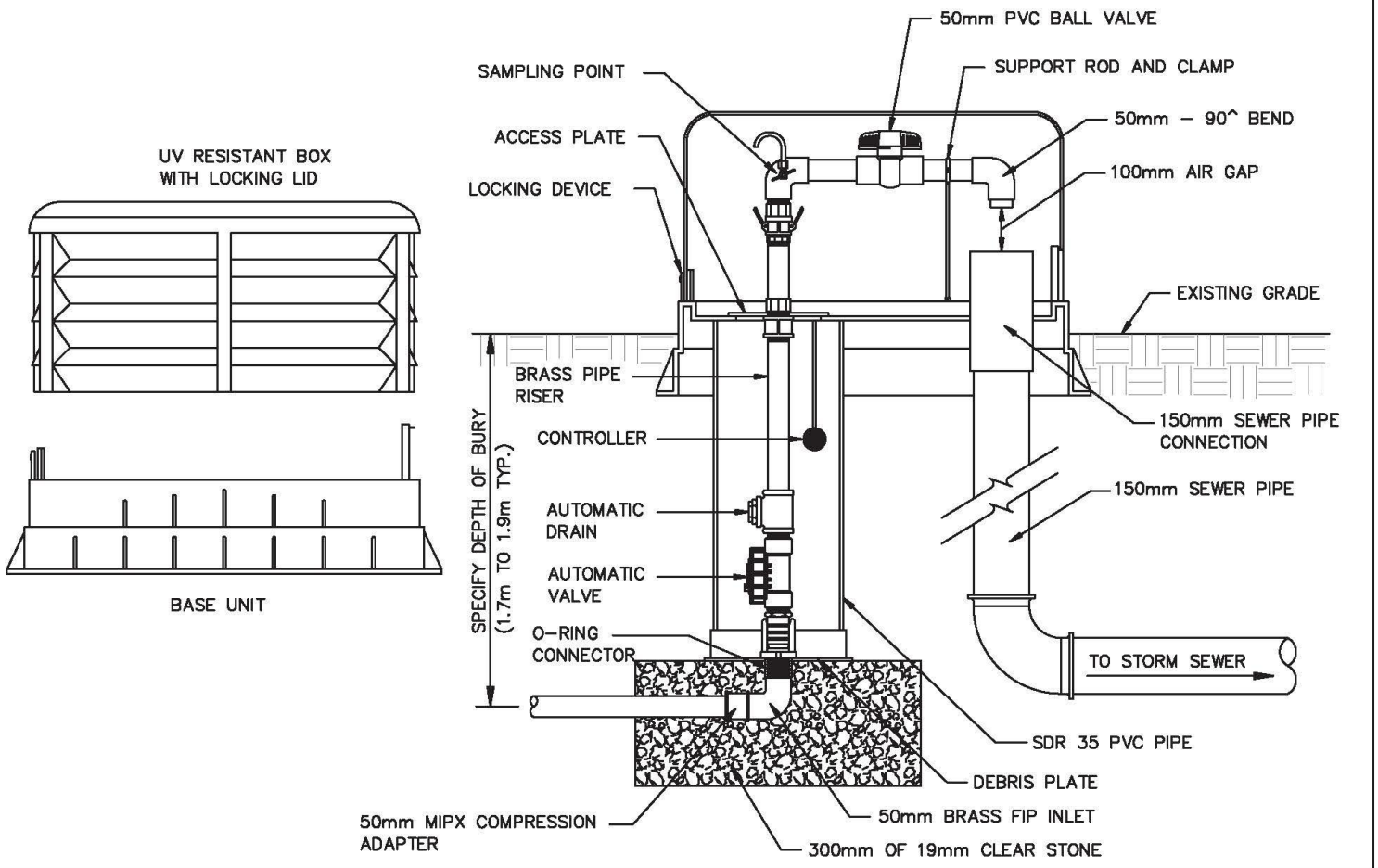

CITY OF LONDON STANDARD DRAWING

9800 AUTOMATIC FLUSHING DEVICE DETAIL

DWG	DATE	APPROVED BY	
W–CS–2 SHEET 2	2017 08 31	CITY ENGINEER	NTS

FLOW RATES WILL VARY WITH PRESSURE. DESIGNERS ARE ASKED TO USE THE FOLLOWING FLOW RATES FOR AUTOMATIC FLUSHING DEVICES AS MINIMUM FLOW RATES WHEN DESIGNING WATER DISTRIBUTION SYSTEMS AND CARRYING OUT CALCULATIONS FOR HYDRAULIC MODELLING AND/OR FOR WATER QUALITY. THE WATER DISTRIBUTION SYSTEM PRESSURE WILL BE THE PRESSURE AS DETERMINED BY HYDRAULIC MODELLING DURING DESIGN.

TABLE 1: DISCHARGE RATES AT VARIOUS PRESSURES FOR AUTOMATIC DEVICES –50mm AUTOMATIC FLUSHING DEVICES

WATER DISTRIBUTION SYSTEM PRESSURE (PSI)	DISCHARGE RATE	
	USGPM	Lps
80psi	195.9	12.36
75psi	189.4	11.95
70psi	182.7	11.53
65psi	175.8	11.09
60psi	168.6	10.64
55psi	161.1	10.16
50psi	153.2	9.67
45psi	145.0	9.15
40psi	136.4	8.60

TABLE 2: DISCHARGE RATES AT VARIOUS PRESSURES FOR AUTOMATIC DEVICES –25mm AUTOMATIC FLUSHING DEVICES

WATER DISTRIBUTION SYSTEM PRESSURE (PSI)	DISCHARGE RATE	
	USGPM	Lps
80psi	36.6	2.31
75psi	35.3	2.23
70psi	34.1	2.15
65psi	32.8	2.07
60psi	31.4	1.98
55psi	30.0	1.89
50psi	28.5	1.80
45psi	27.0	1.70
40psi	25.3	1.60

CITY OF LONDON STANDARD DRAWING

NOTE FOR DESIGNERS WITH REGARD TO AUTOMATIC FLUSHING DEVICES DISCHARGE RATES

DWG	DATE	APPROVED BY	
W–CS–2 SHEET 3	2017 08 31	CITY ENGINEER	NTS

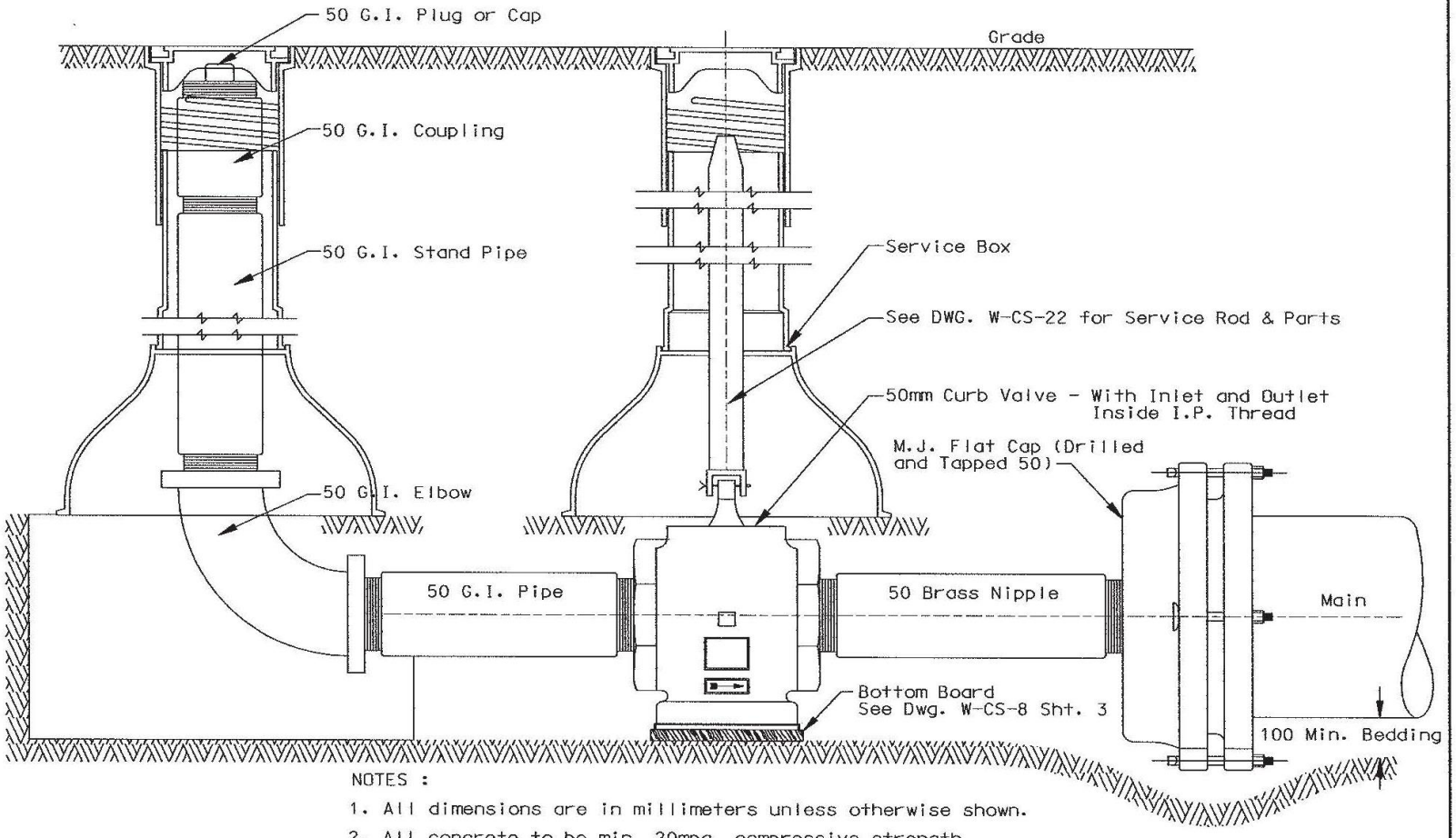

NOTES :

1. All dimensions are in millimeters unless otherwise shown.
2. All concrete to be min. 20mpa. compressive strength.
3. Polyethylene Bond Breaker to be used between concrete and fittings.
4. Mechanical thrust restraint required as per section 701.07.21

CITY OF LONDON STANDARD DRAWING

STANDARD 50mm BLOW OFF INSTALLATION

DWG: W-CS-5	DATE 2006 11 06	APPROVED BY CITY ENGINEER: Roland Willer	NTS

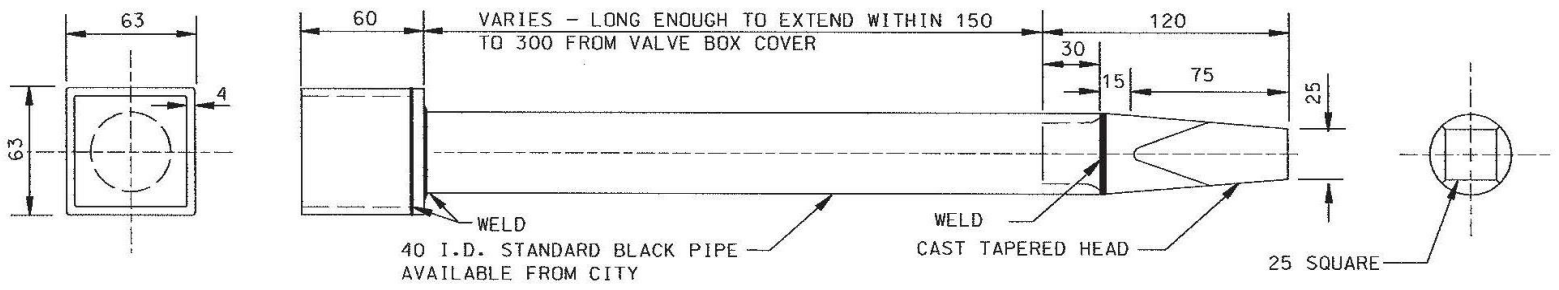

VALVE ROD FOR 40mm VALVES AND LARGER

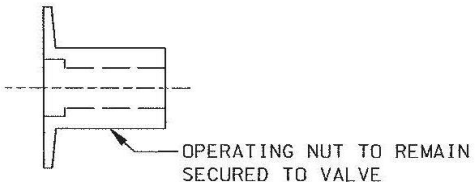

DETAIL – OPERATING NUT

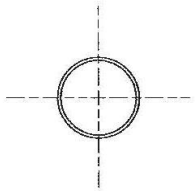

TYPICAL SECTION

NOTES

1 ALL DIMENSIONS ARE IN mm UNLESS OTHERWISE SHOWN.

2 CUSTOMER CAN PICK UP COMPLETED EXTENSION RODS FROM THE CITY STORES DEPARTMENT.

3 RODS WILL BE PROVIDED IN 150 INCREMENTS FROM 600mm TO 1200mm.

CITY OF LONDON STANDARD DRAWING

STANDARD VALVE ROD EXTENSION PIECE FOR 40mm & LARGER VALVES

DWG: W–CS–6	DATE 2006 11 06	APPROVED BY CITY ENGINEER:	NTS

NOTE:

1. REFER TO W-CS-67 FOR DETAILS OF REMOTE WATER METER REGISTER INSTALLATION.

2. NO GROUNDING ALLOWED ON WATER METER

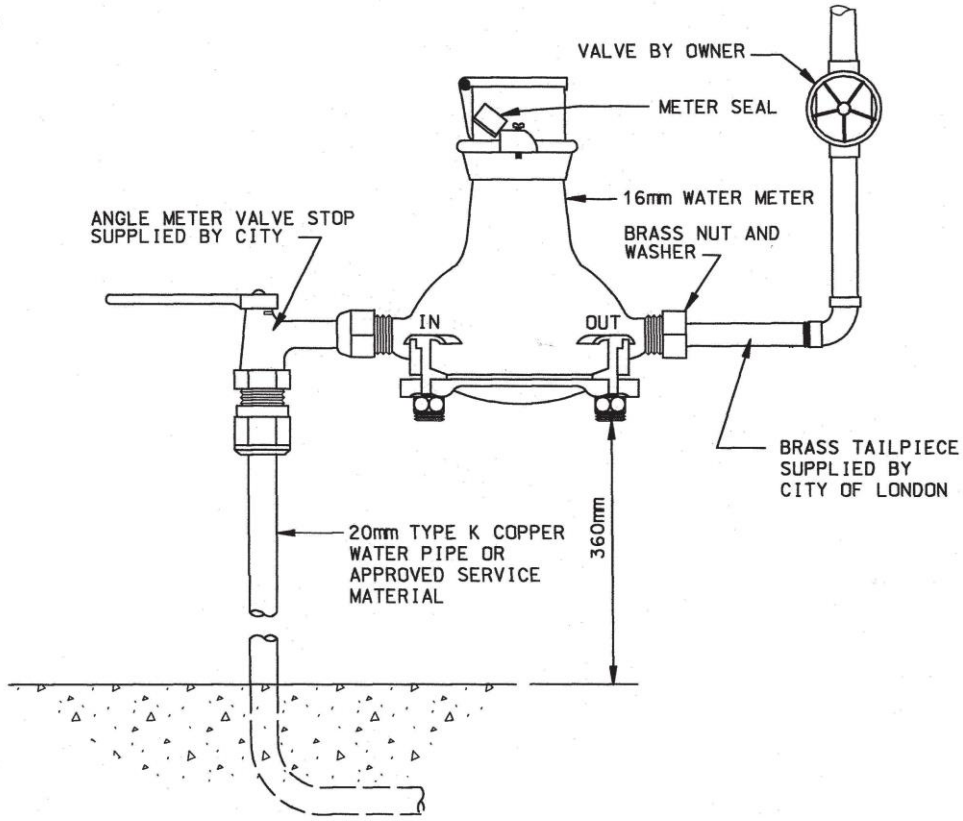

CITY OF LONDON STANDARD DRAWING

STANDARD INSTALLATION OF 16mm WATER METER

DWG: W-CS-7	DATE 2004 11 01	APPROVED BY CITY ENGINEER:	NTS

REV 2004 02 25

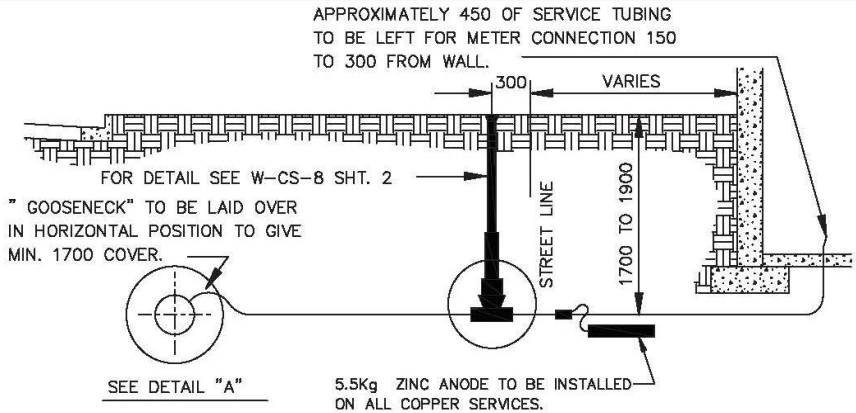

SECTION VIEW

NOTES:

1 ALL DIMENSIONS ARE IN mm UNLESS OTHERWISE SHOWN.

2 MAIN STOPS SHALL BE SPACED ON MAIN NOT CLOSER THAN 450mm . IF MAIN IS PVC TAPS SHALL NOT BE ON A COMMON LINE PARALLEL TO THE AXIS OF THE PIPE AND NO CLOSER THAN 450mm FROM THE SPIGOT END OF THE PIPE.

3 APPROVED SERVICE TUBING AWWA C904. FOR MATERIAL ON PRIVATE PROPERTY, REFER TO ONTARIO BUILDING CODE.

4 SERVICE TUBING TO BE THE SAME MATERIAL FROM THE MAIN TO THE WATER METER.

5 ANY JOINT MADE IN SERVICE TUBING SHALL BE MADE WITH APPROVED COUPLINGS.

6 NO JOINTS SHALL BE MADE UNDER PAVEMENT.

7 APPROVED SERVICE SADDLES MUST BE USED TO TAP 25mm MAIN STOPS INTO 100mm PIPE AND ALL MAIN STOPS INTO PVC AND PVCO PIPE.

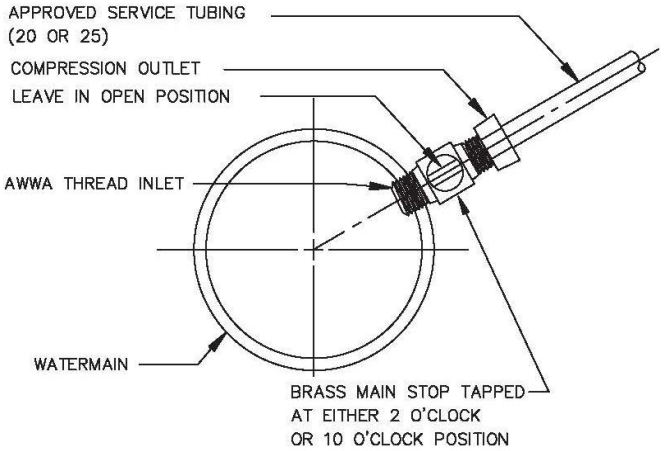

MAIN STOP – DETAIL "A"

(FOR D.I. PIPE ONLY, FOR P.V.C. SEE NOTE 7)

BRASS CURB STOP SHOWN IN OPEN POSITION–WITH BOTTOM BOARD & SERVICE BOX IN PLACE. TO BE LEFT IN CLOSED POSITION WHEN INSTALLED ON A STUB SERVICE.

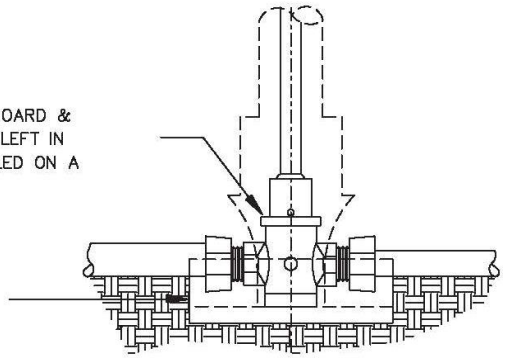

CURB STOP – DETAIL "B"

CITY OF LONDON STANDARD DRAWING

STANDARD INSTALLATION OF 25mm WATER SERVICE

DWG: W-CS-8 SHT. 1	DATE 2018 09 12	APPROVED BY CITY ENGINEER:	NTS

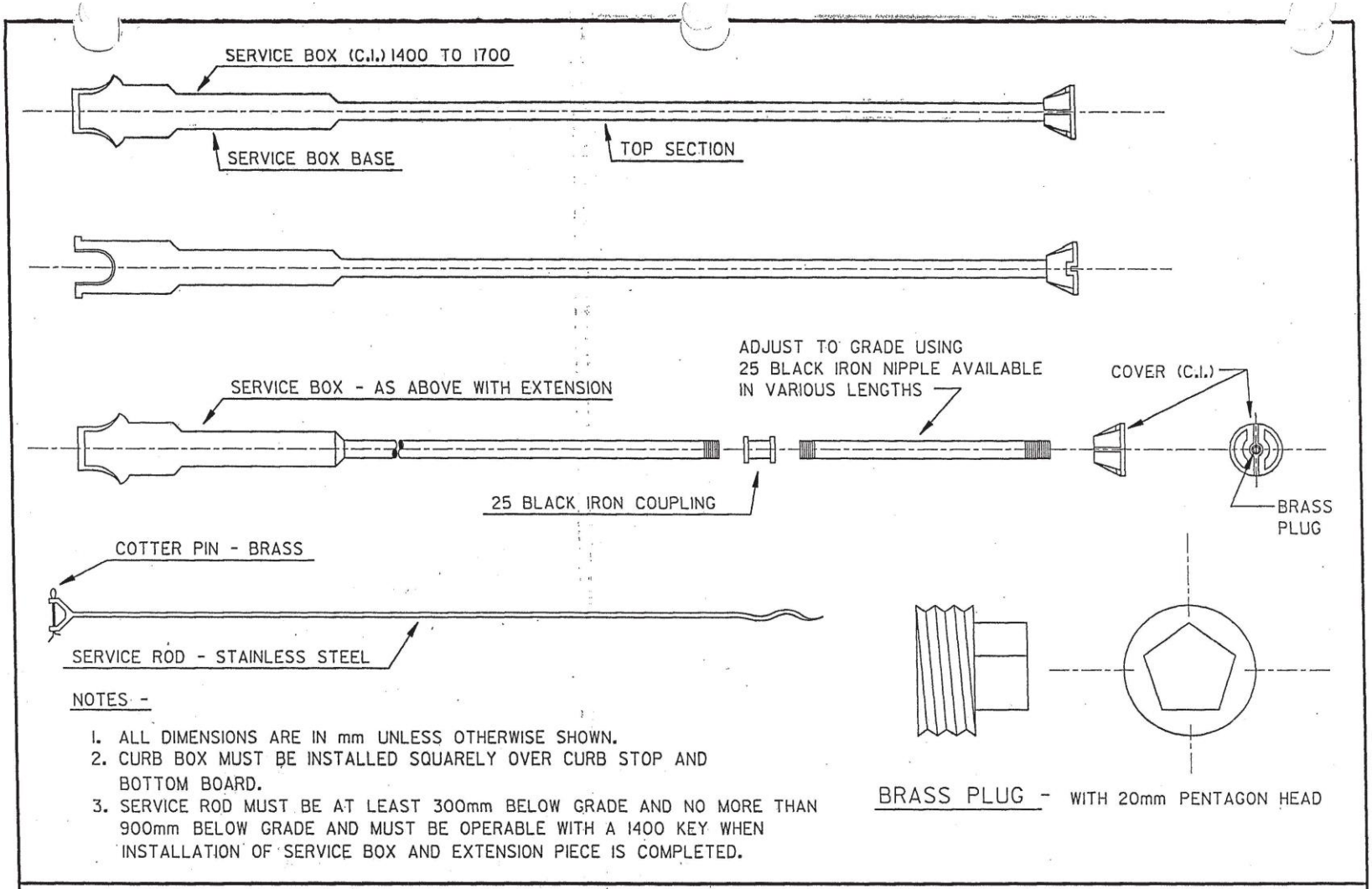
SERVICE BOX (C.I.) 1400 TO 1700
SERVICE BOX BASE
TOP SECTION
ADJUST TO GRADE USING
25 BLACK IRON NIPPLE AVAILABLE
IN VARIOUS LENGTHS
COVER (C.I.)
SERVICE BOX - AS ABOVE WITH EXTENSION
25 BLACK IRON COUPLING
BRASS
PLUG
COTTER PIN - BRASS
SERVICE ROD - STAINLESS STEEL
NOTES -
1. ALL DIMENSIONS ARE IN mm UNLESS OTHERWISE SHOWN.
2. CURB BOX MUST BE INSTALLED SQUARELY OVER CURB STOP AND BOTTOM BOARD.
3. SERVICE ROD MUST BE AT LEAST 300mm BELOW GRADE AND NO MORE THAN 900mm BELOW GRADE AND MUST BE OPERABLE WITH A 1400 KEY WHEN INSTALLATION OF SERVICE BOX AND EXTENSION PIECE IS COMPLETED.
BRASS PLUG - WITH 20mm PENTAGON HEAD
CITY OF LONDON STANDARD DRAWING
STANDARD INSTALLATION OF 20mm AND 25mm WATER SERVICES
DWG: W-CS-8 SHT. 2
DATE 1999 01 30
APPROVED BY CITY ENGINEER:
NTS

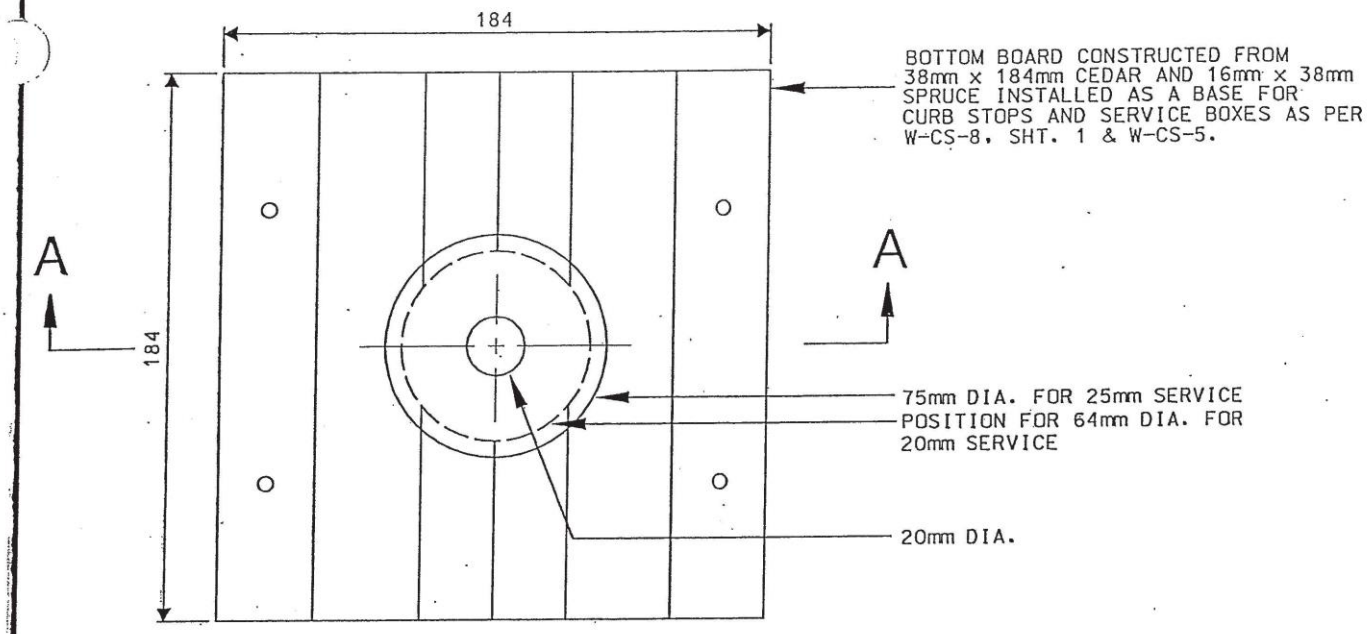

PLAN VIEW

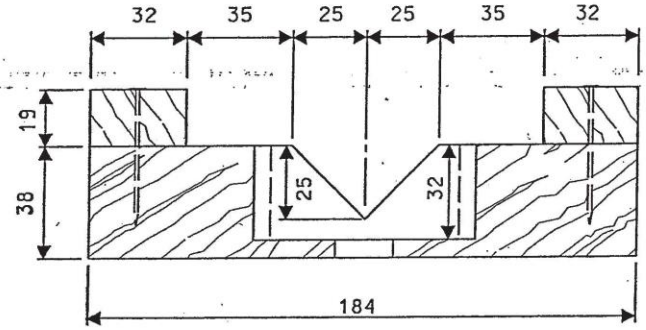

SECTION "A–A"

NOTE: ALL DIMENSIONS ARE IN mm UNLESS OTHERWISE NOTED.

CITY OF LONDON STANDARD DRAWING

BOTTOM BOARD FOR STANDARD INSTALLATION OF 20mm & 25mm WATER SERVICES

DWG: W–CS–8 SHT. 3	DATE 1999 01 30	APPROVED BY CITY ENGINEER:	NTS

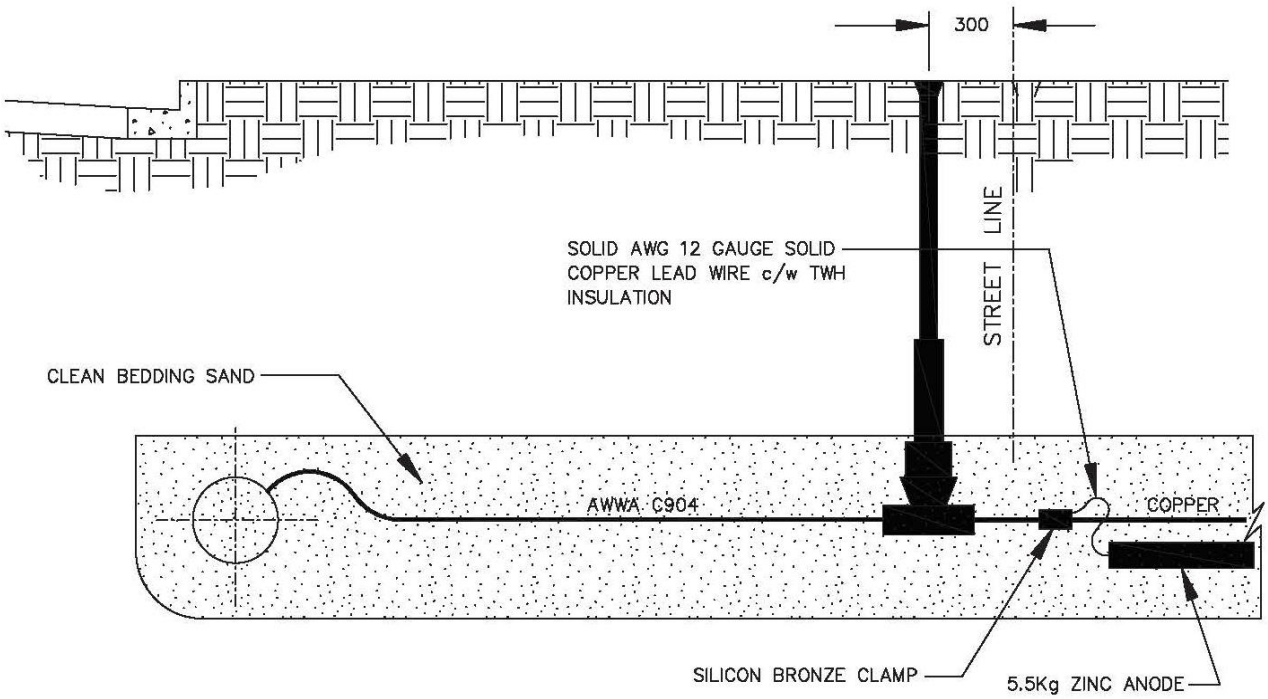

NOTES:

1. ALL COPPER TUBING MUST BE INSTALLED WITH A 5.5Kg ZINC ANODE.
2. 5.5Kg ZINC ANODE MUST CONFORM TO ASTM B418–73 TYPE II.
3. ANODE MUST BE SUPPLIED WITH A 3m AWG 12 GAUGE SOLID COPPER LEAD WIRE WITH TWH INSULATION AND ATTACHED TO THE COPPER SERVICE WITH A SILICON BRONZE CLAMP.

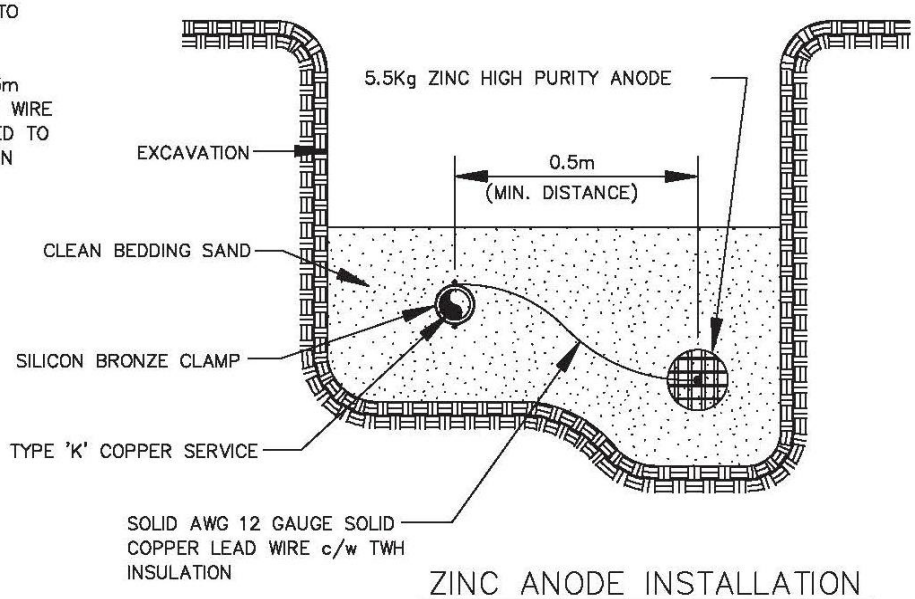

ZINC ANODE INSTALLATION

CITY OF LONDON STANDARD DRAWING

ZINC ANODE INSTALLATION
ON ALL COPPER WATER SERVICE TUBING

DWG W–CS–8 SHT. 4	DATE 2018 09 12	APPROVED BY CITY ENGINEER:	NTS

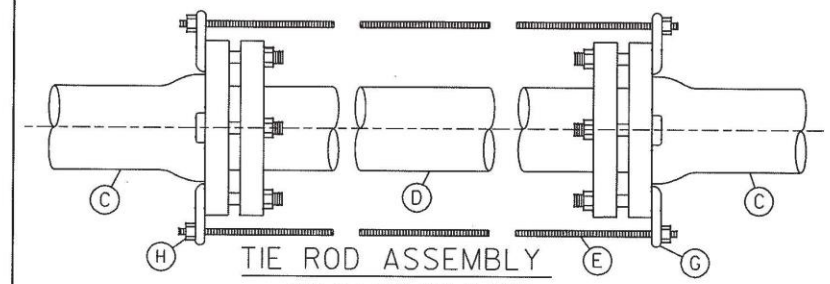

TIE ROD ASSEMBLY
FOR D.I. AND P.V.C. PIPE

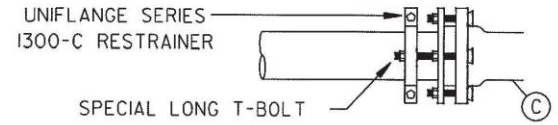

RESTRAINER ASSEMBLY
FOR P.V.C. PIPE

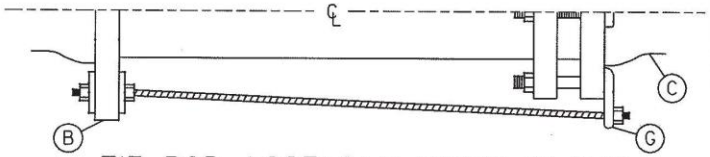

TIE ROD ASSEMBLY USING CLAMP
FOR D.I. PIPE

TIEBOLT JOINT
RESTRAINER

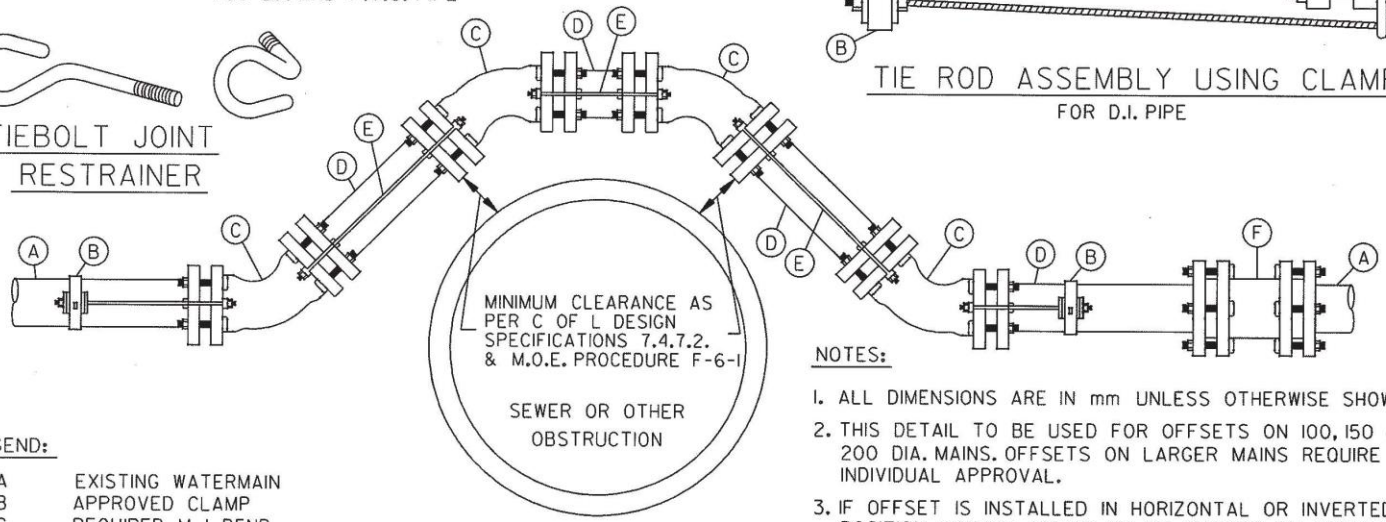

LEGEND:

A	EXISTING WATERMAIN
B	APPROVED CLAMP
C	REQUIRED M.J. BEND
D	FILLER PIECE
E	APPROVED TIEROD (THREADED COR-TEN STEEL)
F	M.J. SLEEVE
G	APPROVED TIEBOLT JOINT RESTRAINER
H	APPROVED TIENUT

NOTES:

1. ALL DIMENSIONS ARE IN mm UNLESS OTHERWISE SHOWN.
2. THIS DETAIL TO BE USED FOR OFFSETS ON 100, 150 & 200 DIA. MAINS. OFFSETS ON LARGER MAINS REQUIRE INDIVIDUAL APPROVAL.
3. IF OFFSET IS INSTALLED IN HORIZONTAL OR INVERTED POSITION, MINIMUM COVER TO BE DECIDED BY ENGINEER.
4. ONE PAIR OF 20mm DIA. RODS FOR 100, 150 & 200 DIA. PIPE.
5. COVER TIEBOLT ASSEMBLY WITH DENSO PASTE MASTIC AND TAPE ALL TO MANUFACTURER'S SPECIFICATIONS.
6. ALL RESTRAINERS MUST BE APPROVED BY THE CITY OF LONDON.

CITY OF LONDON STANDARD DRAWING

STANDARD MECHANICAL JOINT OFFSET INSTALLATION USING TIEBOLT COUPLINGS

DWG:	DATE	APPROVED BY CITY ENGINEER:	
W-CS-12	2012 01 26	John M Braam	NTS

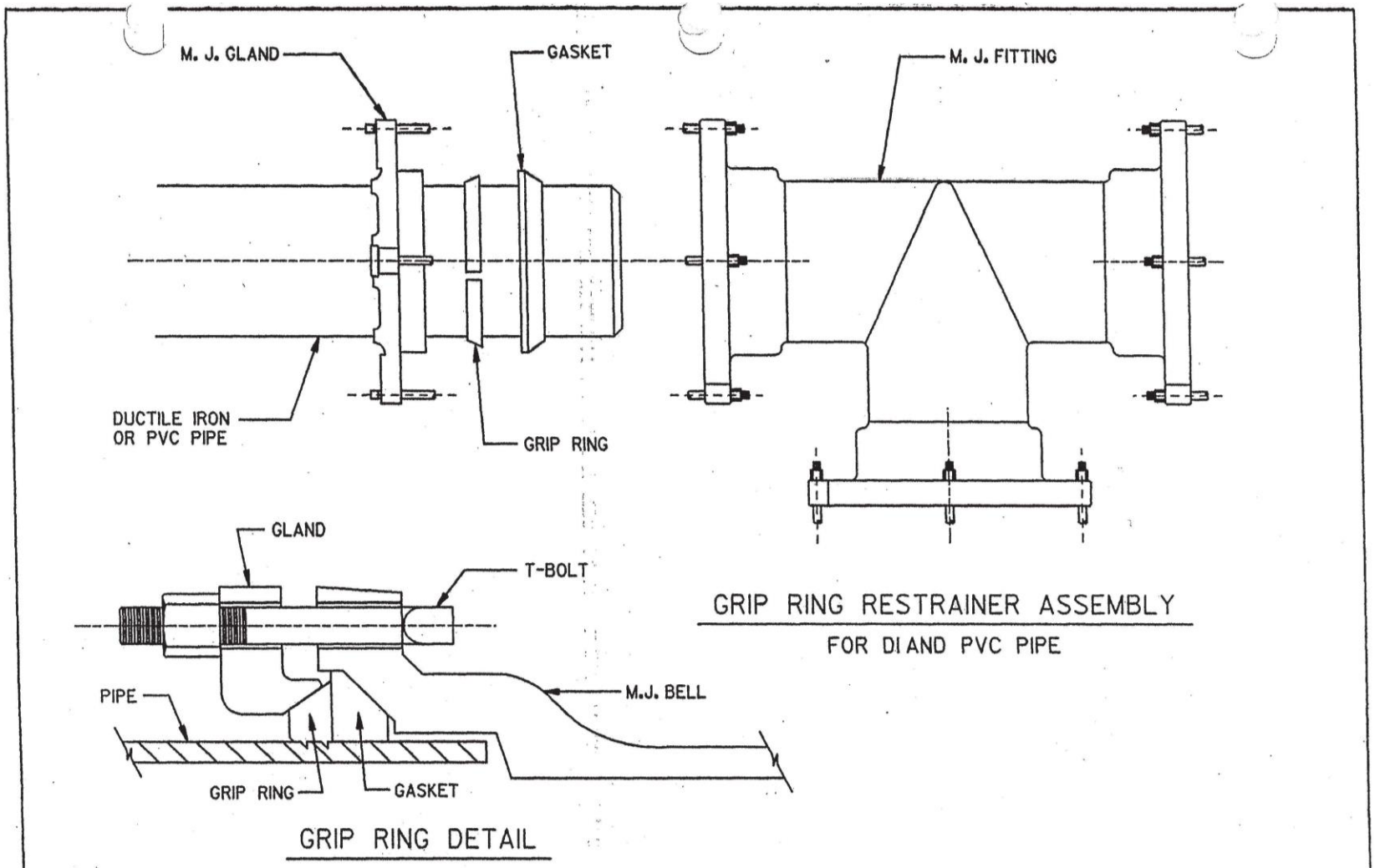

GRIP RING RESTRAINER ASSEMBLY
FOR DI AND PVC PIPE

GRIP RING DETAIL

CITY OF LONDON STANDARD DRAWING

GRIP RING RESTRAINER ASSEMBLY
FOR DI & PVC PIPE

DWG: W-CS-12 SHT. 2	DATE 2000 02 29	APPROVED BY CITY ENGINEER:	NTS

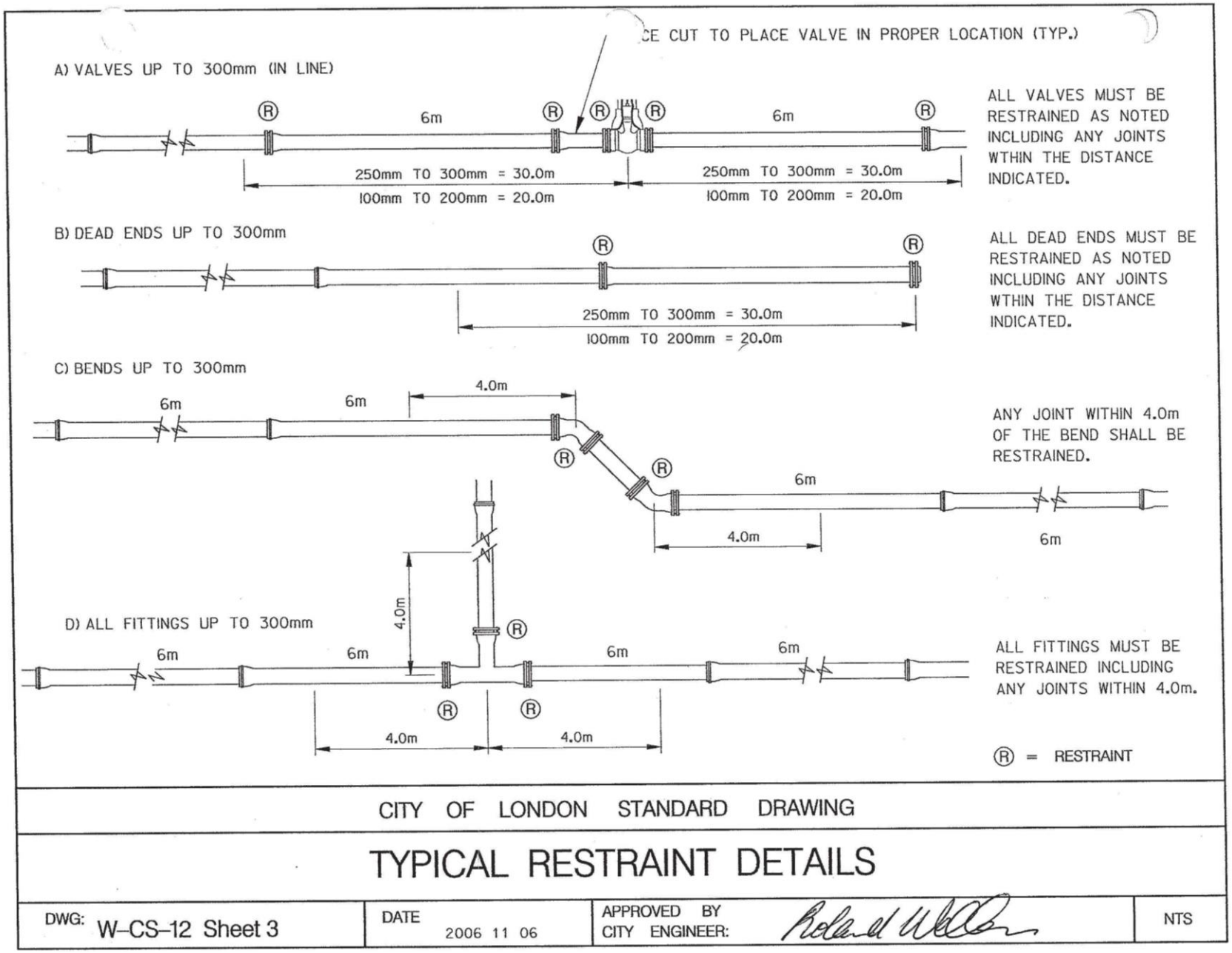
CE CUT TO PLACE VALVE IN PROPER LOCATION (TYP.)
A) VALVES UP TO 300mm (IN LINE)
6m
6m
250mm TO 300mm = 30.0m
100mm TO 200mm = 20.0m
250mm TO 300mm = 30.0m
100mm TO 200mm = 20.0m
ALL VALVES MUST BE RESTRAINED AS NOTED INCLUDING ANY JOINTS WTHIN THE DISTANCE INDICATED.
B) DEAD ENDS UP TO 300mm
250mm TO 300mm = 30.0m
100mm TO 200mm = 20.0m
ALL DEAD ENDS MUST BE RESTRAINED AS NOTED INCLUDING ANY JOINTS WTHIN THE DISTANCE INDICATED.
C) BENDS UP TO 300mm
6m
6m
4.0m
6m
4.0m
6m
ANY JOINT WITHIN 4.0m OF THE BEND SHALL BE RESTRAINED.
D) ALL FITTINGS UP TO 300mm
4.0m
6m
6m
6m
6m
4.0m
4.0m
ALL FITTINGS MUST BE RESTRAINED INCLUDING ANY JOINTS WITHIN 4.0m.
R = RESTRAINT
CITY OF LONDON STANDARD DRAWING
TYPICAL RESTRAINT DETAILS
DWG: W-CS-12 Sheet 3
DATE 2006 11 06
APPROVED BY CITY ENGINEER:
NTS

NOTES:

1. ALL DIMESIONS ARE IN mm UNLESS OTHERWISE SHOWN.
2. MAIN STOPS SHALL BE SPACED ON MAIN NOT CLOSER THAN 450. IF MAIN IS PVC TAPS SHALL NOT BE ON A COMMON LINE PARALLEL TO THE AXIS OF THE PIPE AND NO CLOSER THAN 450 FROM THE SPIGOT END OF PIPE.
3. ANY JOINT MADE IN SERVICE PIPE SHALL BE MADE WITH APPROVED COUPLINGS.
4. NO JOINTS SHALL BE MADE UNDER PAVEMENT.
5. APPROVED SERVICE SADDLES MUST BE USED TO TAP ALL 40mm & 50mm MAIN STOPS INTO ALL TYPES OF PIPE.

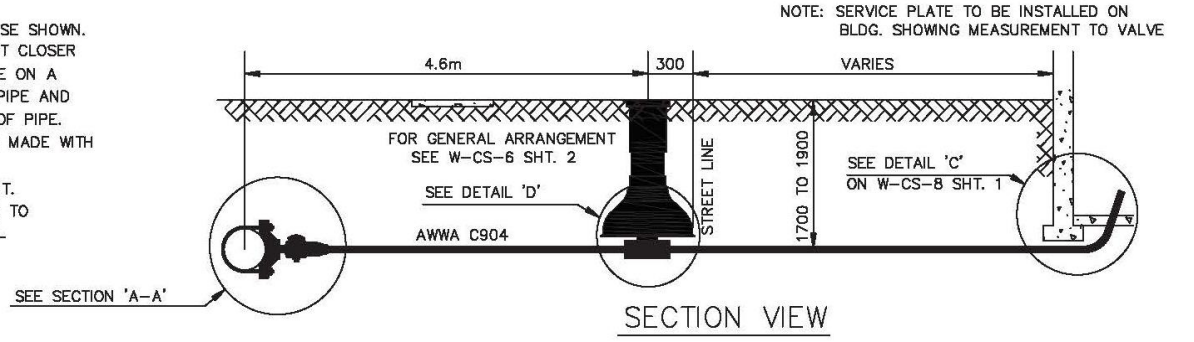

SECTION VIEW

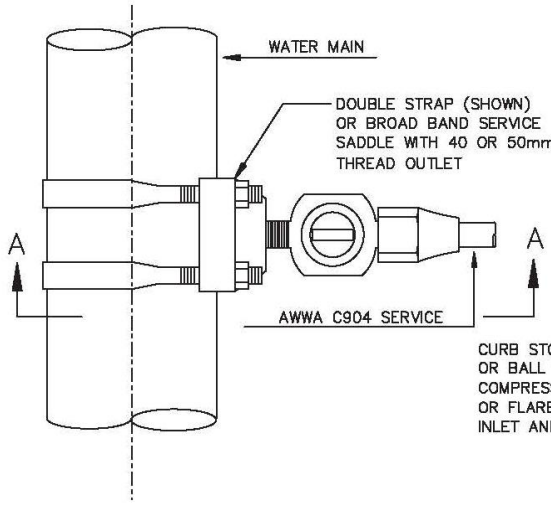

PLAN

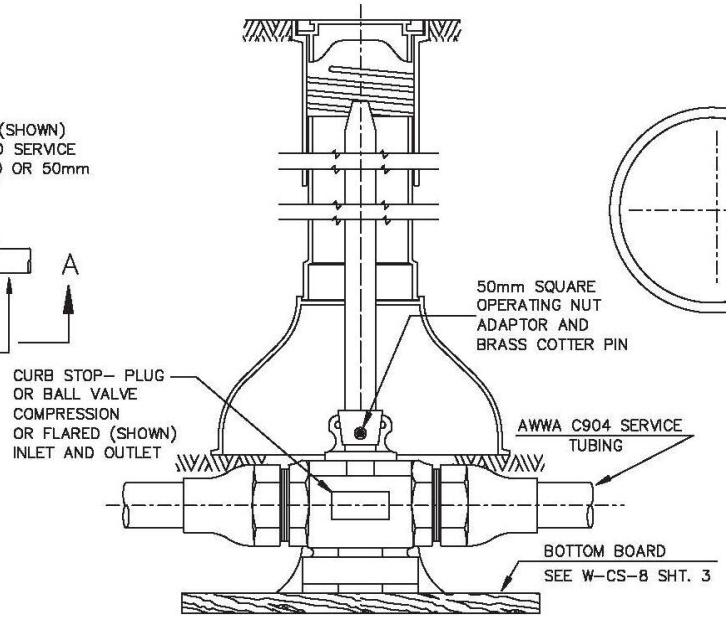

DETAIL 'D'

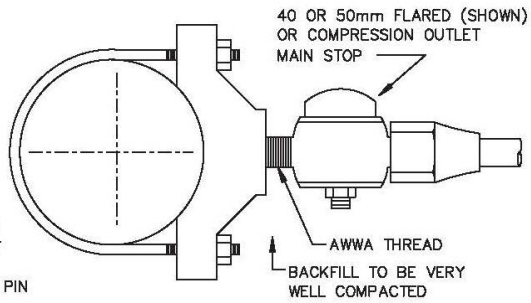

SECTION 'A-A'

CITY OF LONDON STANDARD DRAWING

STANDARD INSTALLATION OF 40mm AND 50mm WATER SERVICES

DWG: W-CS-22	DATE 2018 09 12	APPROVED BY CITY ENGINEER:	NTS

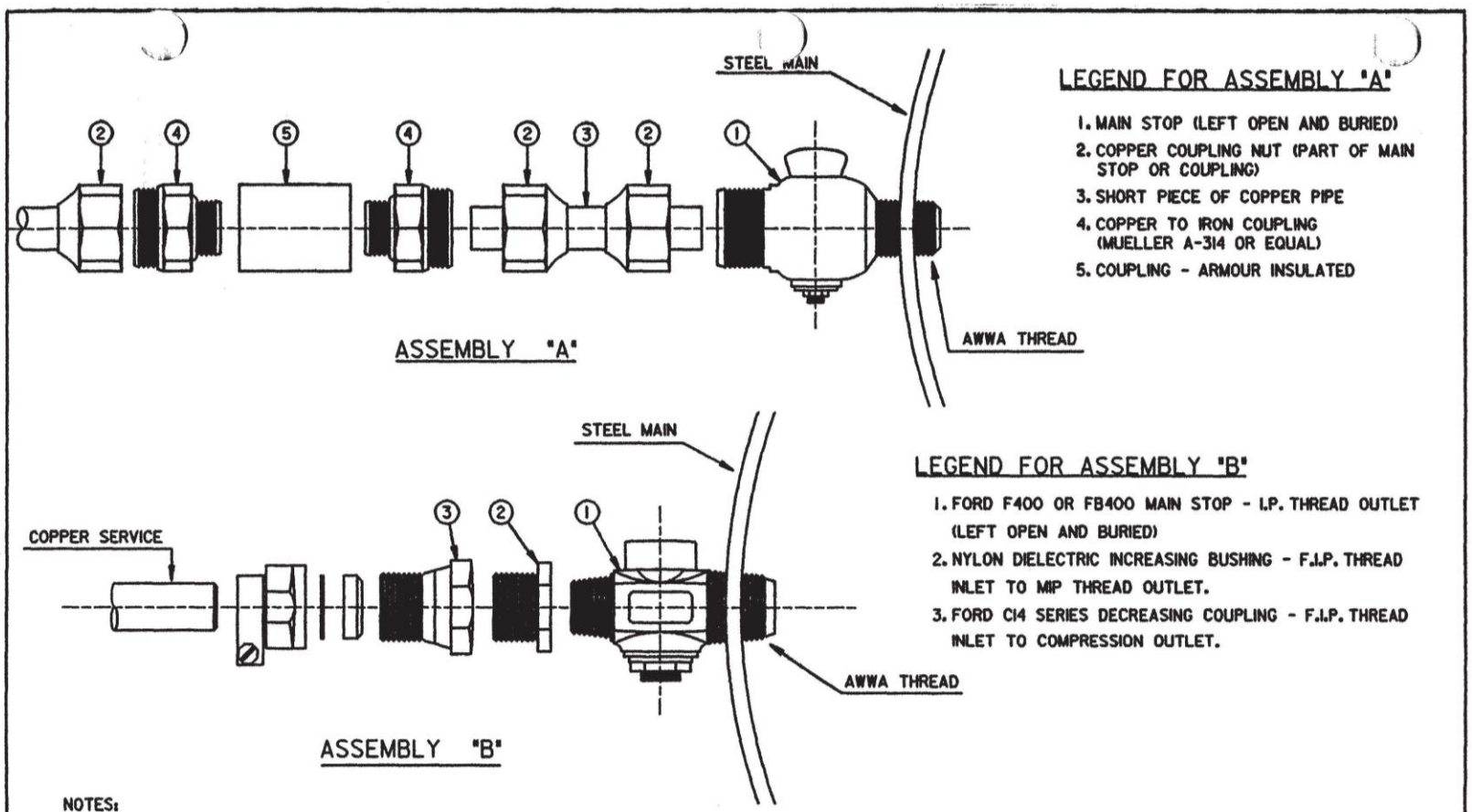

CITY OF LONDON STANDARD DRAWING

CATHODIC PROTECTION ASSEMBLIES FOR 20mm TO 50mm WATER SERVICES

DWG: W-CS-24	DATE 2000 02 29	APPROVED BY CITY ENGINEER:	NTS

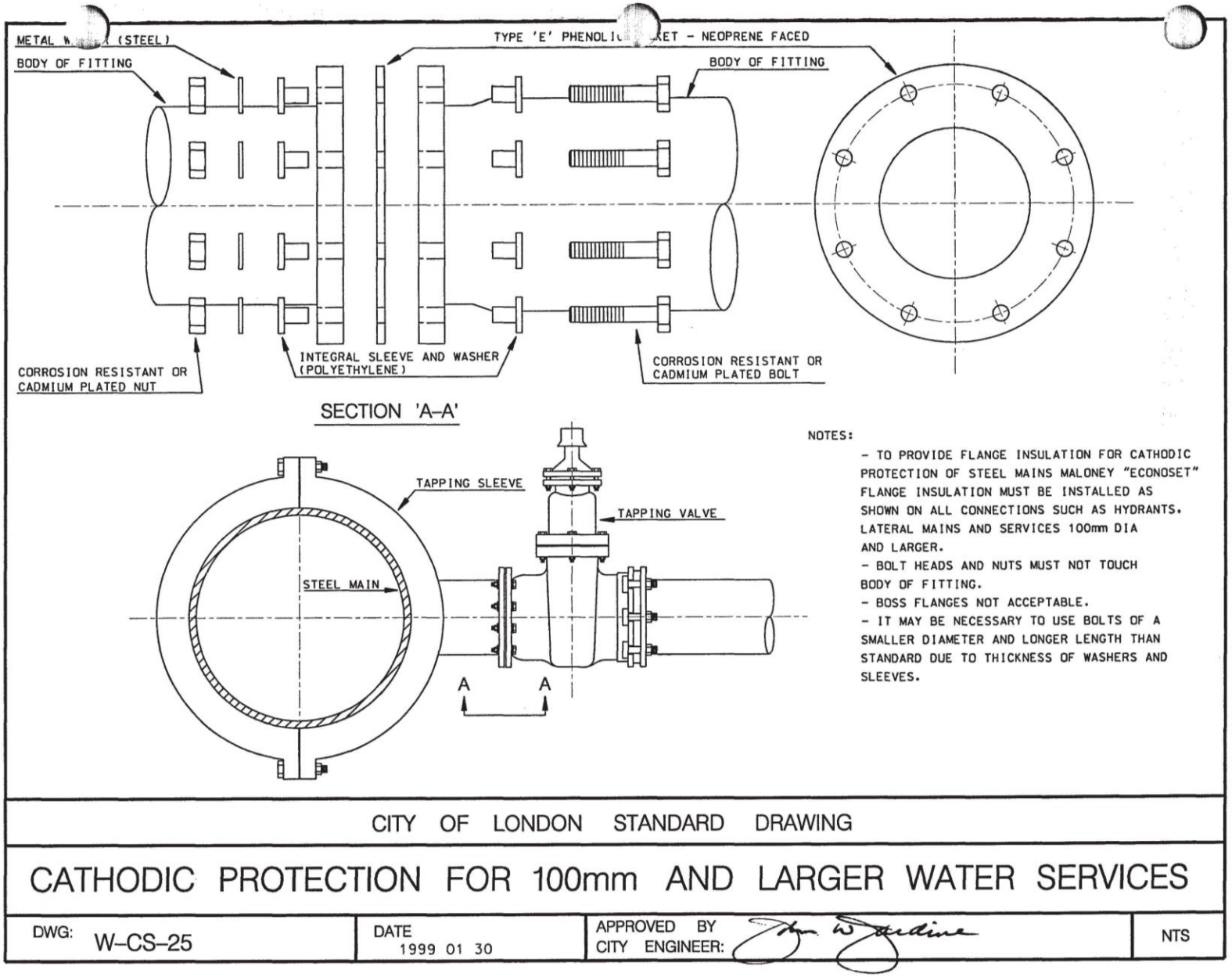
METAL W... (STEEL)
BODY OF FITTING
TYPE 'E' PHENOLI... ...KET - NEOPRENE FACED
BODY OF FITTING
CORROSION RESISTANT OR CADMIUM PLATED NUT
INTEGRAL SLEEVE AND WASHER (POLYETHYLENE)
CORROSION RESISTANT OR CADMIUM PLATED BOLT
SECTION 'A-A'
TAPPING SLEEVE
TAPPING VALVE
STEEL MAIN
A
A
NOTES:
- TO PROVIDE FLANGE INSULATION FOR CATHODIC PROTECTION OF STEEL MAINS MALONEY "ECONOSET" FLANGE INSULATION MUST BE INSTALLED AS SHOWN ON ALL CONNECTIONS SUCH AS HYDRANTS. LATERAL MAINS AND SERVICES 100mm DIA AND LARGER.
- BOLT HEADS AND NUTS MUST NOT TOUCH BODY OF FITTING.
- BOSS FLANGES NOT ACCEPTABLE.
- IT MAY BE NECESSARY TO USE BOLTS OF A SMALLER DIAMETER AND LONGER LENGTH THAN STANDARD DUE TO THICKNESS OF WASHERS AND SLEEVES.
CITY OF LONDON STANDARD DRAWING
CATHODIC PROTECTION FOR 100mm AND LARGER WATER SERVICES
DWG: W-CS-25
DATE 1999 01 30
APPROVED BY CITY ENGINEER:
NTS

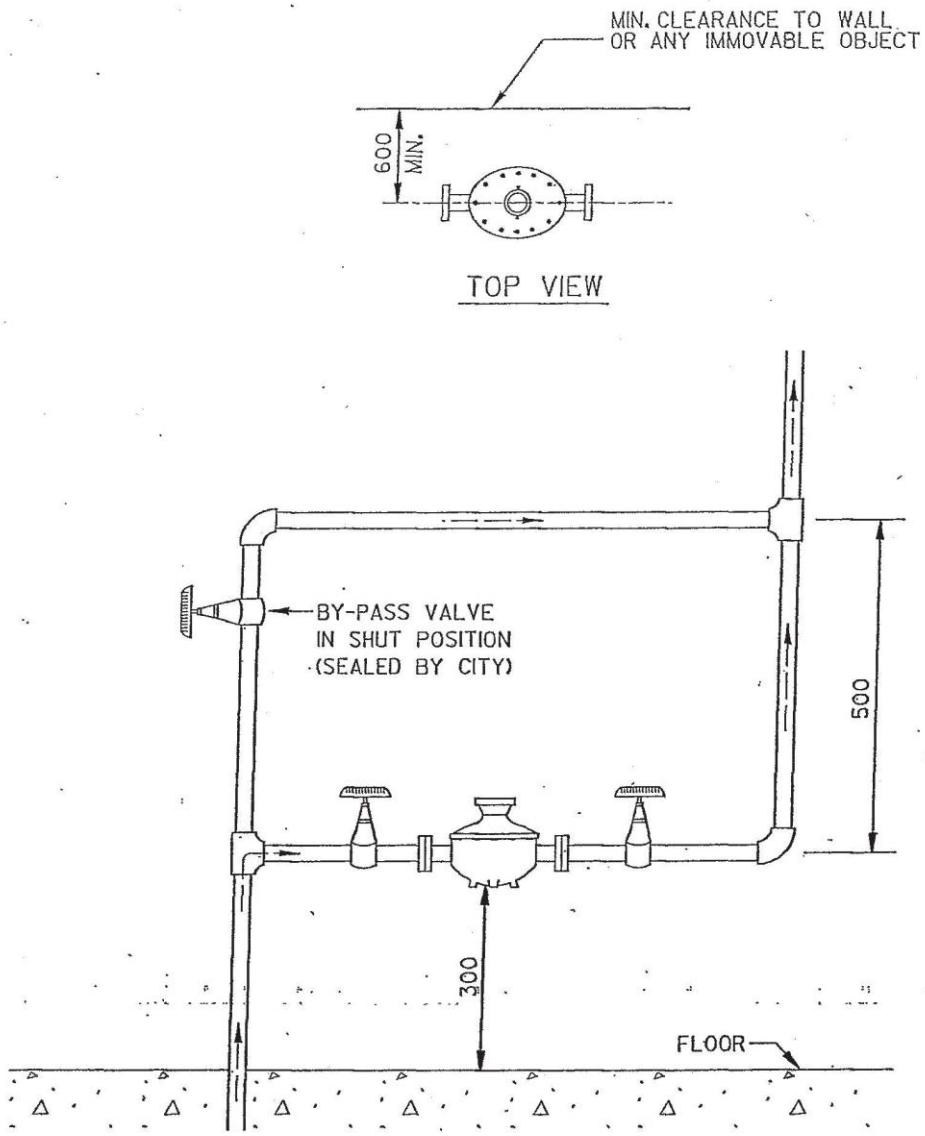

NOTES:

1. ALL 40mm METERS AND LARGER AND ANY METERS SUPPLYING MORE THAN ONE CUSTOMER REQUIRE A BY-PASS UNLESS OTHERWISE APPROVED BY ENGINEERING. UNLESS THE CONDITIONS OUTLINED IN 4.6.1 EXIST, A 25mm METER INSTALLATION DOES NOT REQUIRE A BY-PASS.
2. METER AND BY-PASS PIPING TO BE EQUAL SIZE.
3. ALL DIMENSIONS ARE EXPRESSED IN mm UNLESS OTHERWISE NOTED.
4. SOLDERED COPPER PIPE AND FITTINGS MAY BE USED.

CITY OF LONDON STANDARD DRAWING

TYPICAL INSTALLATION FOR 25mm, 40mm, & 50mm DISC TYPE WATER METER

DWG: W-CS-30 SHT. 1	DATE 1999 01 30	APPROVED BY CITY ENGINEER:	NTS

NOTES:

1 ALL DIMENSIONS ARE IN mm UNLESS SHOWN OTHERWISE.

2 FLANGED FITTINGS ARE REQUIRED FOR ALL METERS.

3 MINIMUM SIZE OF VALVING & BYPASS PIPING TO BE EQUAL TO METER SIZE. ALL VALVES, PIPING, FITTINGS & SUPPORTS TO BE SUPPLIED & AND INSTALLED BY OWNER

4 ALL CHECK VALVES, BACKFLOW PREVENTION, PRESSURE REDUCING VALVES, ETC. MUST BE INSTALLED AFTER THE BY-PASS WHEN FIRE FLOWS ARE METERED.

5 ALL METERS ARE TO BE INSTALLED HORIZONTALLY UNLESS APPROVED OTHERWISE BY ENGINEERING.

6 INSTALLATION INDICATES THE MIN. SPACE REQUIREMENTS IN A MECHANICAL OR METERED ROOM. MIN. CLEARANCE FROM FLOOR, WALL OR FIXED EQUIPMENT TO BE 450.

METER SIZE	A TURBINE	A COMPOUND	B STANDARD	B FIREFLOW	E	F			
75	305	431			750	150			
100	356	508			1000	200			
150	458	610	229	683	1500	300			
200	508	NA	254	796	2000	400			

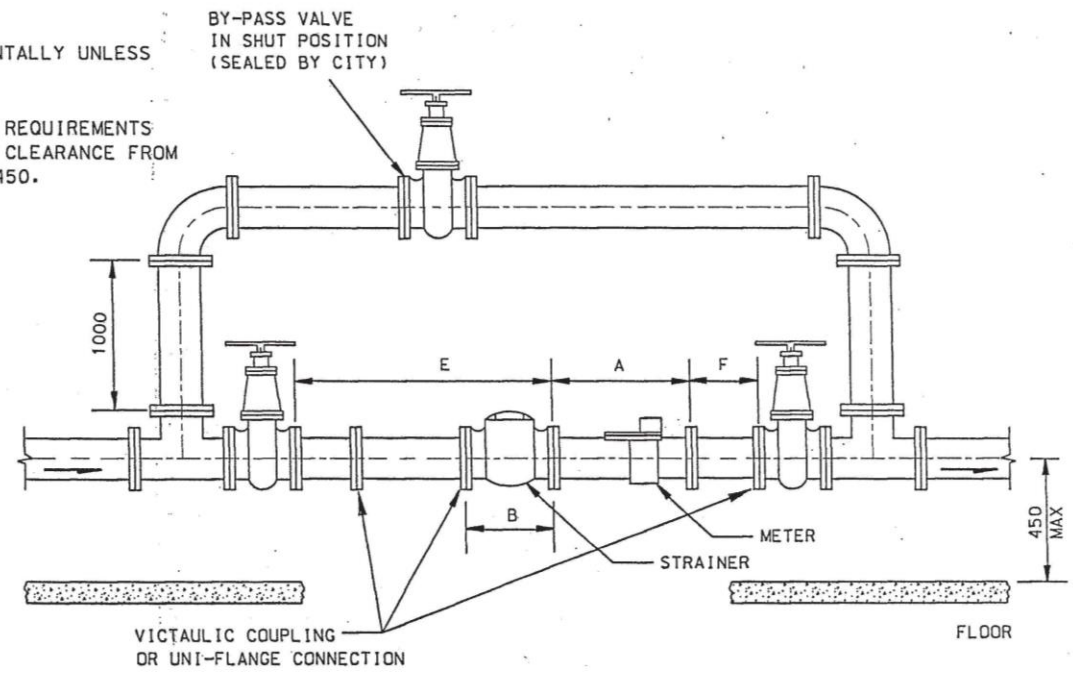

CITY OF LONDON STANDARD DRAWING

TYPICAL TURBINE WATER METER INSTALLATION FOR 75mm TO 200mm

DWG: W-CS-30 SHT. 2	DATE 1999 01 30	APPROVED BY CITY ENGINEER:	NTS

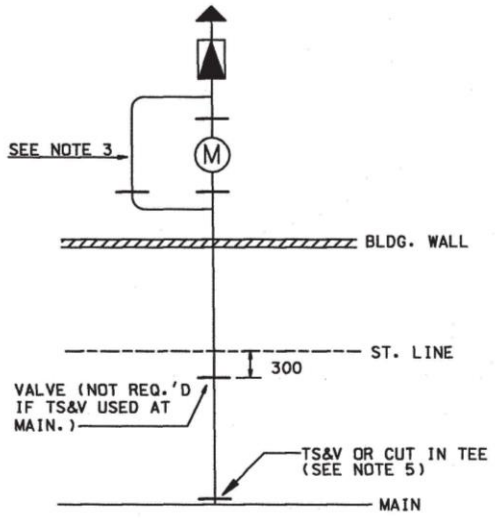

DOMESTIC SERVICE

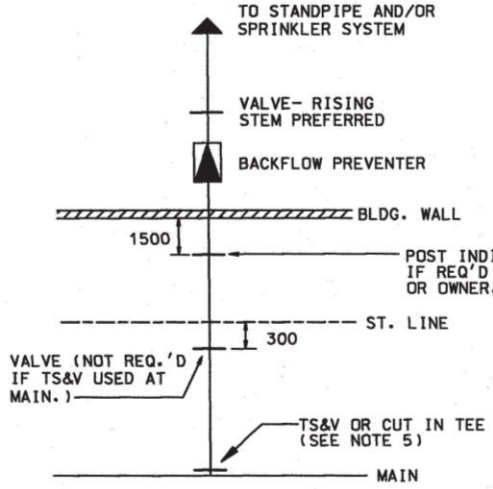

STANDPIPE AND/OR SPRINKLER SERVICE

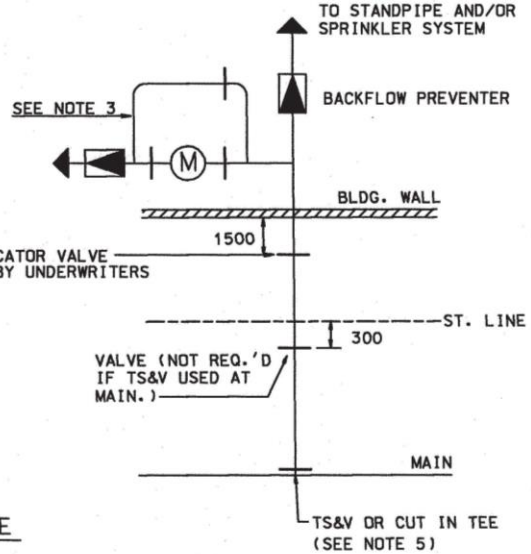

DOMESTIC SERVICE TAKEN OFF STANDPIPE AND/OR SPRINKLER SERVICE

NOTES:

1. ALL DIMENSIONS ARE IN mm UNLESS OTHERWISE SHOWN.
2. THE DOMESTIC WATER MAY BE TAKEN FROM THE SPRINKLER SERVICE AND/OR THE STANDPIPE SERVICE INSIDE THE BUILDING IF APPROVED BY FIRE UNDERWRITERS. IF NOT, THE DOMESTIC SERVICE SHALL BE INSTALLED TO THE MAIN AS SHOWN WITH A MINIMUM OF 300mm SEPARATION FROM THE FIRE SERVICE.
3. DOMESTIC VALVES, METER AND BY-PASS, IF BY-PASS IS REQUIRED, SHALL BE IMMEDIATELY INSIDE THE STRUCTURE WALL. VALVES ARE PREFERRED TO BE RISING STEM. SEE DWG. W-CS-30.
4. CONTROL AND CHECK VALVES ON FIRE SERVICES SHALL BE AS REQUIRED BY ONTARIO BUILDING CODE.
5. IF THE SERVICE IS OFF A SERVICE MAIN, A TAPPING SLEEVE AND VALVE OR A TEE AND VALVE SHALL BE INSTALLED AT THE SERVICE MAIN.
6. SEE SHEET 2 FOR DETAILS OF SERVICE.
7. FOR BACKFLOW PREVENTER REQUIREMENTS REFER TO ONTARIO PLUMBING CODE.
8. FOR DOMESTIC SERVICE, THE BACKFLOW PREVENTER SHALL BE INSTALLED DOWNSTREAM OF THE METER/BYPASS ASSEMBLY.

CITY OF LONDON STANDARD DRAWING

SCHEMATIC LAYOUT OF 100mm AND LARGER SERVICES

DWG: W-CS-31 SHT. 1	DATE 2004 11 01	APPROVED BY CITY ENGINEER:	NTS

REV 2004 02 25

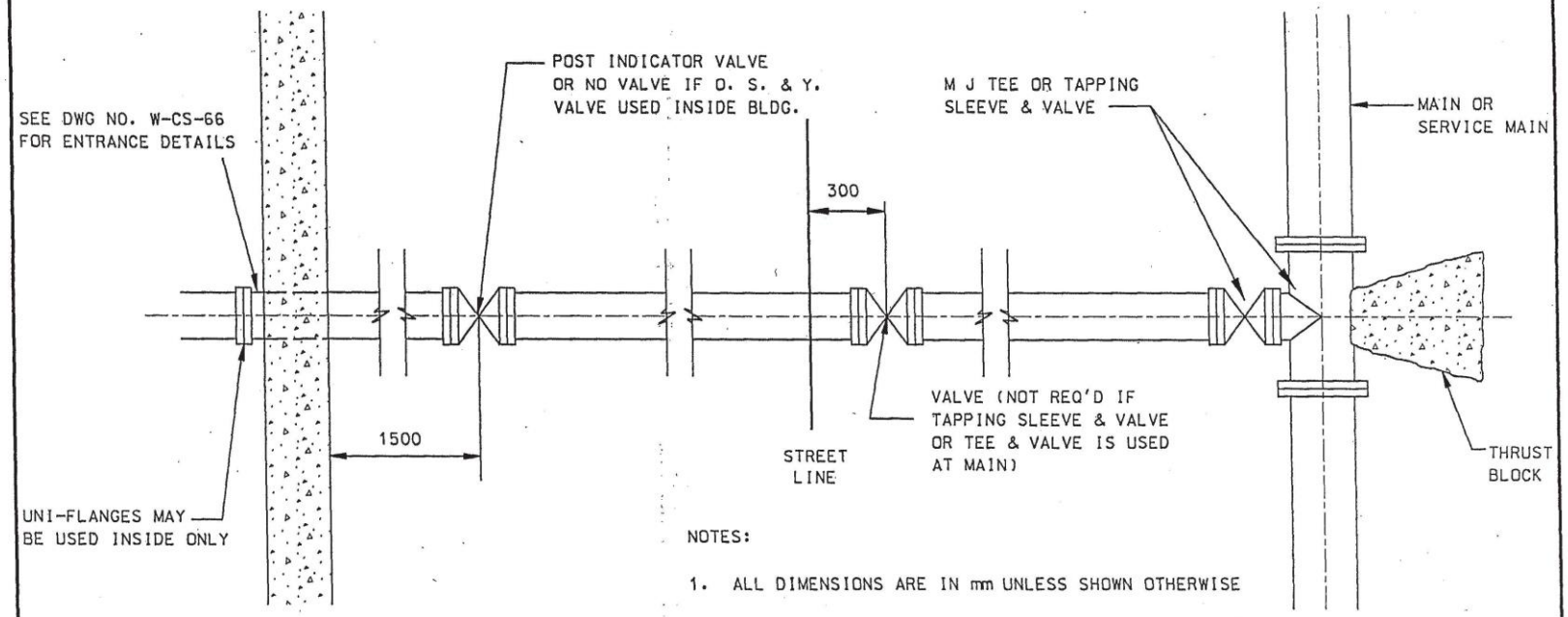

NOTES:

1. ALL DIMENSIONS ARE IN mm UNLESS SHOWN OTHERWISE
2. SEE SHEET 1 FOR TYPICAL SERVICE LAYOUTS
3. FIRE AND DOMESTIC LINES WILL TERMINATE WITH FLANGED ENDS INSIDE BUILDING.
4. ALL FITTINGS OUTSIDE BUILDING SHALL BE M. J. CAST IRON.
5. IF THE SERVICE IS OFF A SERVICE MAIN A TAPPING SLEEVE & AND VALVE OR TEE AND VALVE SHALL BE INSTALLED AT THE SERVICE MAIN..

CITY OF LONDON STANDARD DRAWING

TYPICAL DETAILS OF 100mm & LARGER SERVICE

DWG: W-CS-31 SHT. 2	DATE 1999 01 30	APPROVED BY CITY ENGINEER:	NTS

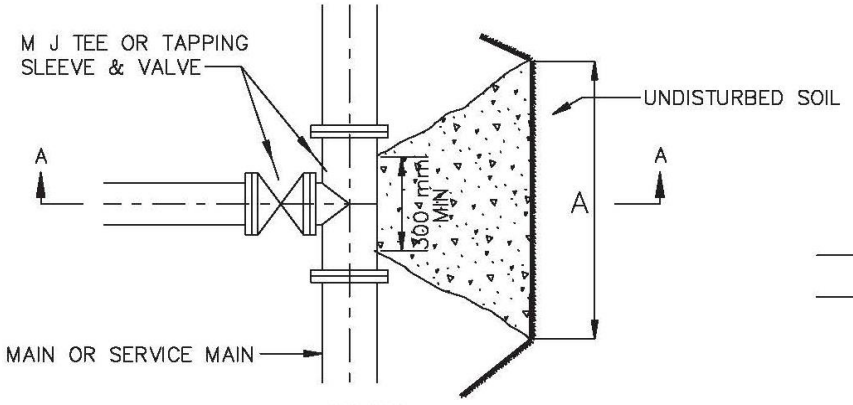

PLAN

TYPICAL HORIZONTAL THRUST BLOCK

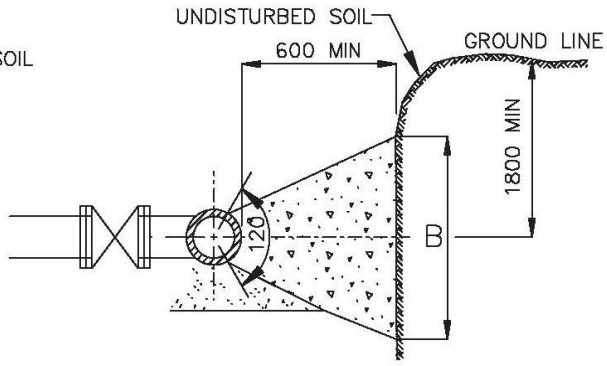

SECTION 'A–A'

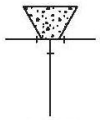

TEE

APPLICATION OF THRUST BLOCKS
AT LARGE SERVICE CONNECTIONS

NOTES

1 . ALL DIMENSIONS ARE IN mm UNLESS OTHERWISE SHOWN.
2. CONCRETE TO HAVE COMPRESSIVE STRENGTH OF 20 MPa AT 28 DAYS.
3. ALL PIPE AND FITTING JOINTS MUST BE ACCESSIBLE FOR REPAIR.
4. USE POLYETHELENE BOND BREAKER BETWEEN CONCRETE AND FITTINGS.
5. TO CALCULATE DIMENSIONS 'A' AND 'B' REFER TO TABLES ON SHEET 3.

EXAMPLE

FIND BEARING AREA AxB FOR 300mm TEE IN FIRM CLAY.
FROM TABLE 1. THRUST IS 92750 NEWTONS.
FROM TABLE 2. BEARING CAPACITY IS 96000 PASCALS.
REQUIRED BEARING AREA IS $\frac{92750 \text{ NEWTONS}}{96000 \text{ PASCALS}} = 0.97 \text{ m}^2$

SELECT A = 1.2m B = 0.8m

A x B = 0.96 m^2

CITY OF LONDON STANDARD DRAWING

TYPICAL THRUST BLOCKS FOR LARGE WATER SERVICES

DWG: W–CS–43 SHT. 1	DATE 2018 09 12	APPROVED BY CITY ENGINEER:	NTS

TABLE 1 – THRUST AT FITTINGS IN NEWTONS AT 1035KPa STATIC PRESSURE

PIPE DIA. (mm)	100	150	200	250	300
TEES	12350	25350	43400	72400	92750

TABLE 2 – BEARING CAPACITY OF VARIOUS SOILS IN Pascals (Pa)

SOIL	Pa
FIRM CLAY	96000
MEDIUM CLAY	72000
SOFT CLAY	48000
COARSE SAND OR GRAVEL	192000
SAND	96000

NOTES:

THE DESIGNER IS RESPONSIBLE FOR DETERMINING SAFE BEARING CAPACITIES. THOSE GIVEN, WHICH ARE OFTEN USED, ARE FOR HORIZONTAL THRUSTS WHEN DEPTH OF COVER EXCEEDS 0.6m.

CITY OF LONDON STANDARD DRAWING

TYPICAL THRUST BLOCKS FOR LARGE WATER SEVICES

DWG: W–CS–43 SHT. 3	DATE 2018 09 12	APPROVED BY CITY ENGINEER:	NTS

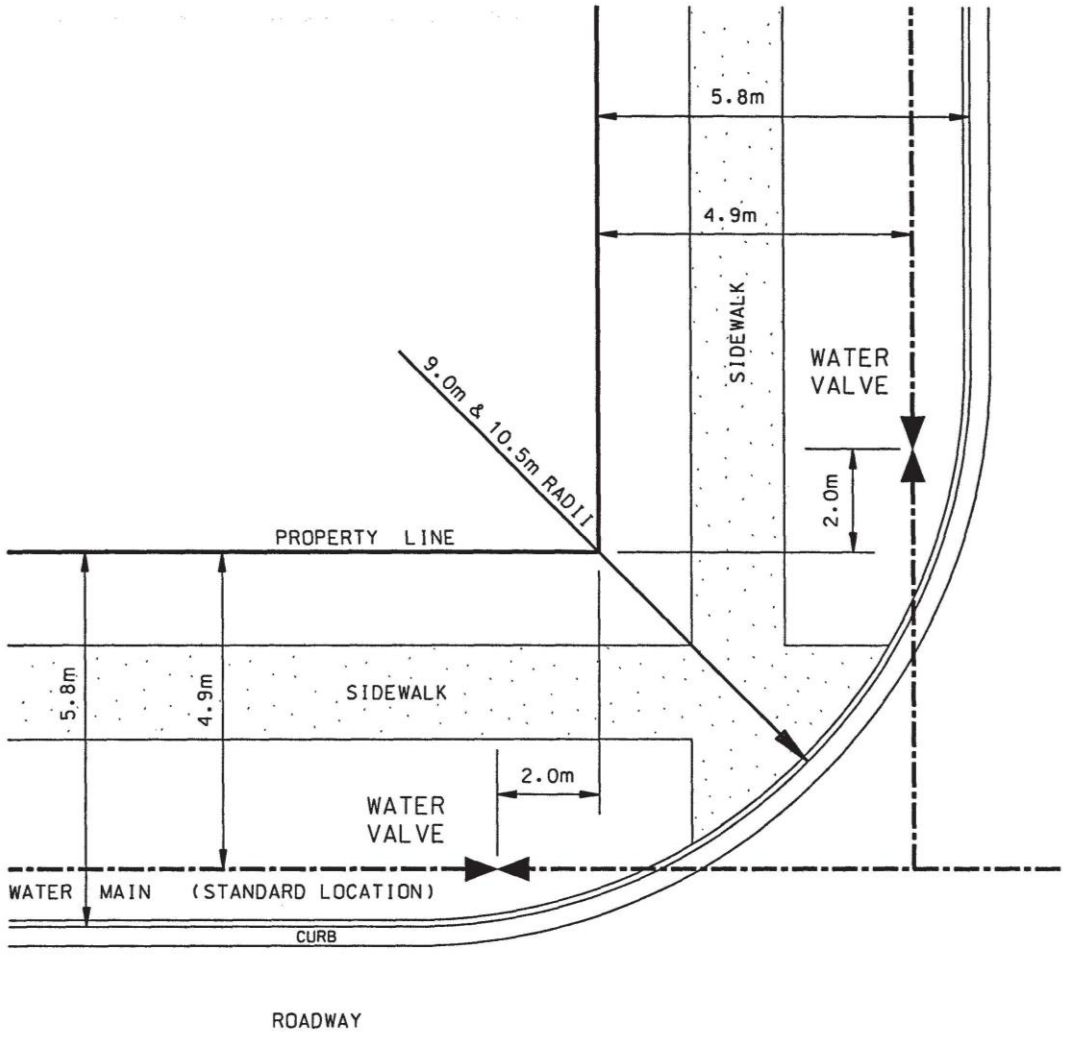

NOTES:

THIS STANDARD MAY NOT APPLY IF CURBS ARE MORE THAN 5.8m FROM PROPERTY LINE. THE OBJECTIVE IS TO PREVENT VALVES FROM BEING INSTALLED IN THE GUTTER.

CITY OF LONDON STANDARD DRAWING

STANDARD LOCATION FOR WATER VALVES AT INTERSECTIONS WITH 9.0m & 10.5m CURB RADII

DWG	DATE	APPROVED BY CITY ENGINEER:	
W–CS–45	1999 01 30		NTS

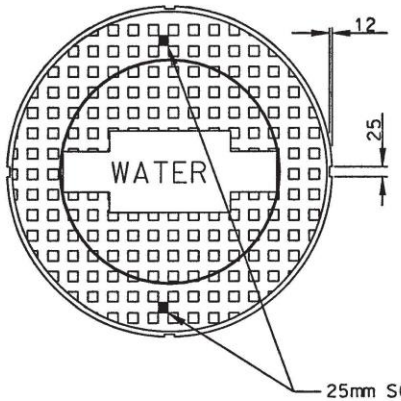

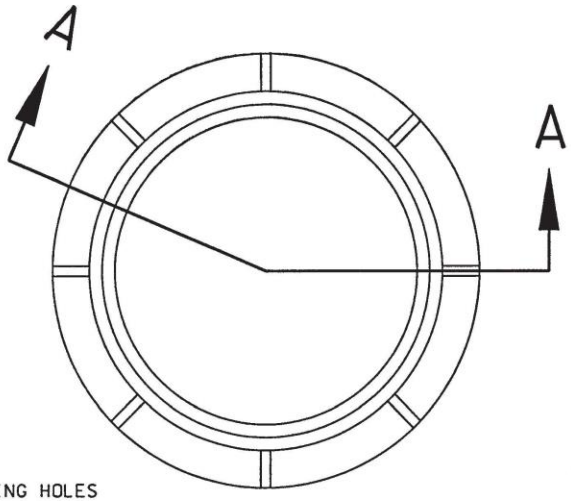

NOTES:

1. THIS IS A McCOY No. HM29 FRAME AND COVER WITH CUSTOMERS NAME AND SPECIAL 25mm SQUARE LIFTING HOLES.
2. THE TOTAL WEIGHT IS APPROX. 272 kg.

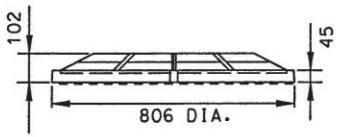

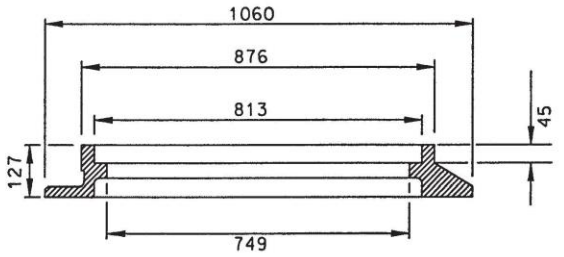

SECTION 'A–A'

CITY OF LONDON STANDARD DRAWING

STANDARD WATER 737mm FRAME AND COVER

DWG: W–CS–51 SHT. 2	DATE 1999 01 30	APPROVED BY CITY ENGINEER:	NTS

GRAMS OF HYPOCHLORITE PER 100 METRES OF MAIN

mg PER LITRE OR PARTS PER MILLION	MAIN DIAMETER – MILLIMETRES							
	100	150	200	250	300	350	400	450
12.5	14.5	32.5	57.5	90.5	130	177	231	292
25	29	65	115	181	260	354	462	584
50	58	130	230	362	520	708	924	1168
75	87	195	345	543	780	1068	1386	1742
100	116	260	460	724	1040	1416	1848	2336

NOTES:

1. THE CONTRACT ADMINISTRATOR WILL DETERMINE STRENGTH OF DOSAGE. ON NEW MAINS HYPOCHLORITE WILL BE INTRODUCED AS A SLURRY AT THE CHARGING END OF MAIN THROUGH A MUELLER, INSTALLED IF NECESSARY FOR THE PURPOSE.
2. MAIN WILL THEN BE LEFT CHARGED, BUT OUT OF SERVICE, FOR NOT LESS THAN 24 HOURS AND THEN BLOWN OFF. CHLORINATION PERSON WILL TEST FOR RESIDUAL AT TIME OF BLOW OFF. IF REQUIRED, MAIN WILL RECEIVE A SECOND DOSAGE FOR A FURTHER 24 HOURS.
3. ON REPAIR PROJECTS, CONDITIONS WILL DICTATE MEASURES TO BE USED.
4. DO NOT TAKE INTERNALLY. AVOID CONTACT WITH EYES AND PROLONGED CONTACT WITH SKIN. KEEP AWAY FROM HEAT AND COMBUSTIBLE MATERIALS.
5. KEEP MATERIALS IN ORIGINAL CONTAINER.
6. NOTE SAFETY PRECAUTIONS ON CONTAINER.
7. DOSAGE IS BASED ON 70 PERCENT AVAILABLE CHLORINE IN HYPOCHLORITE.

CITY OF LONDON STANDARD DRAWING

DISINFECTION

DWG: W–CS–60	DATE 2019 09 09	APPROVED BY CITY ENGINEER:	NTS

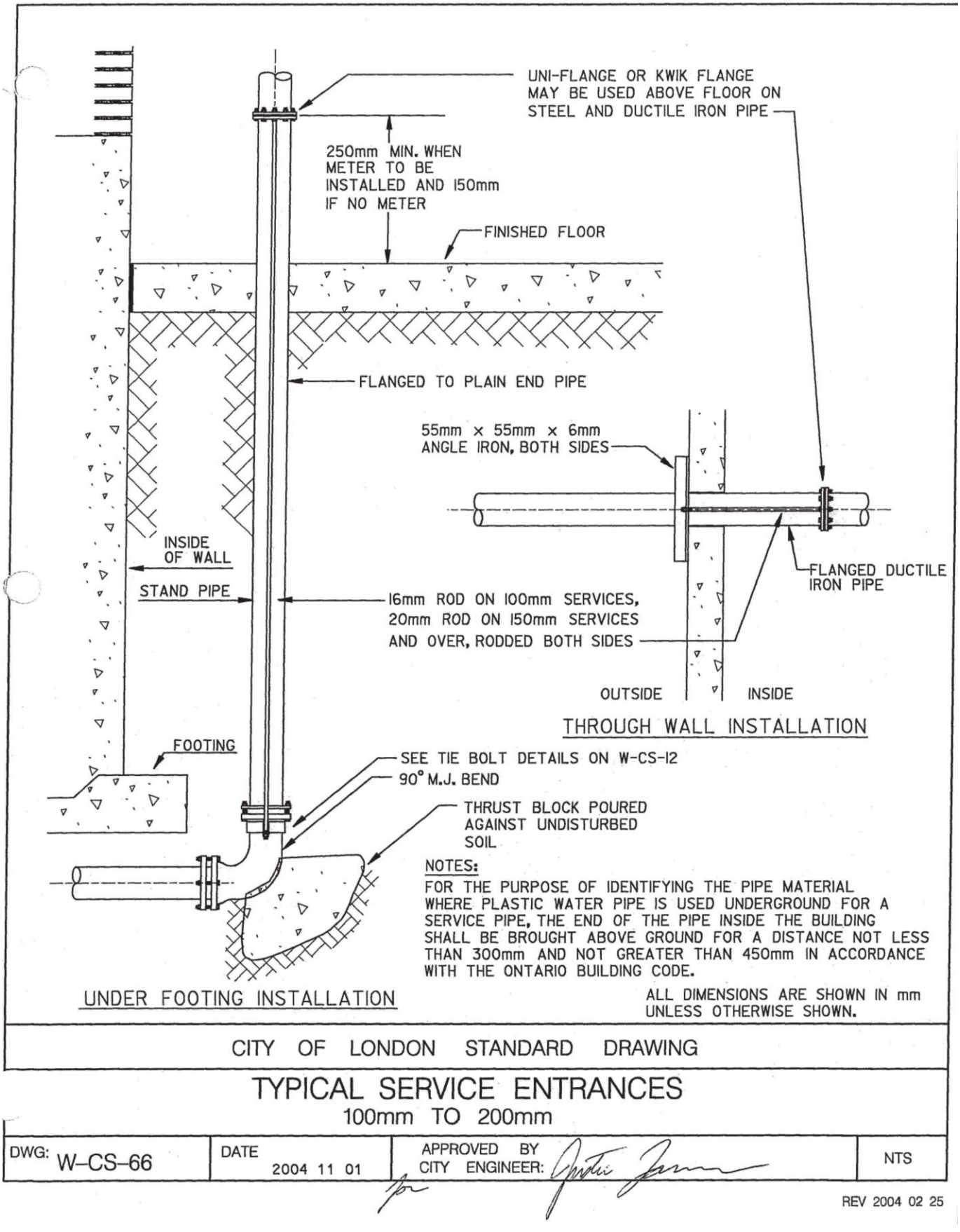
UNI-FLANGE OR KWIK FLANGE MAY BE USED ABOVE FLOOR ON STEEL AND DUCTILE IRON PIPE
250mm MIN. WHEN METER TO BE INSTALLED AND 150mm IF NO METER
FINISHED FLOOR
FLANGED TO PLAIN END PIPE
55mm x 55mm x 6mm ANGLE IRON, BOTH SIDES
INSIDE OF WALL
STAND PIPE
16mm ROD ON 100mm SERVICES, 20mm ROD ON 150mm SERVICES AND OVER, RODDED BOTH SIDES
FLANGED DUCTILE IRON PIPE
OUTSIDE
INSIDE
THROUGH WALL INSTALLATION
FOOTING
SEE TIE BOLT DETAILS ON W-CS-12
90° M.J. BEND
THRUST BLOCK POURED AGAINST UNDISTURBED SOIL
NOTES:
FOR THE PURPOSE OF IDENTIFYING THE PIPE MATERIAL WHERE PLASTIC WATER PIPE IS USED UNDERGROUND FOR A SERVICE PIPE, THE END OF THE PIPE INSIDE THE BUILDING SHALL BE BROUGHT ABOVE GROUND FOR A DISTANCE NOT LESS THAN 300mm AND NOT GREATER THAN 450mm IN ACCORDANCE WITH THE ONTARIO BUILDING CODE.
UNDER FOOTING INSTALLATION
ALL DIMENSIONS ARE SHOWN IN mm UNLESS OTHERWISE SHOWN.
CITY OF LONDON STANDARD DRAWING
TYPICAL SERVICE ENTRANCES
100mm TO 200mm
DWG: W-CS-66
DATE 2004 11 01
APPROVED BY CITY ENGINEER:
NTS
REV 2004 02 25

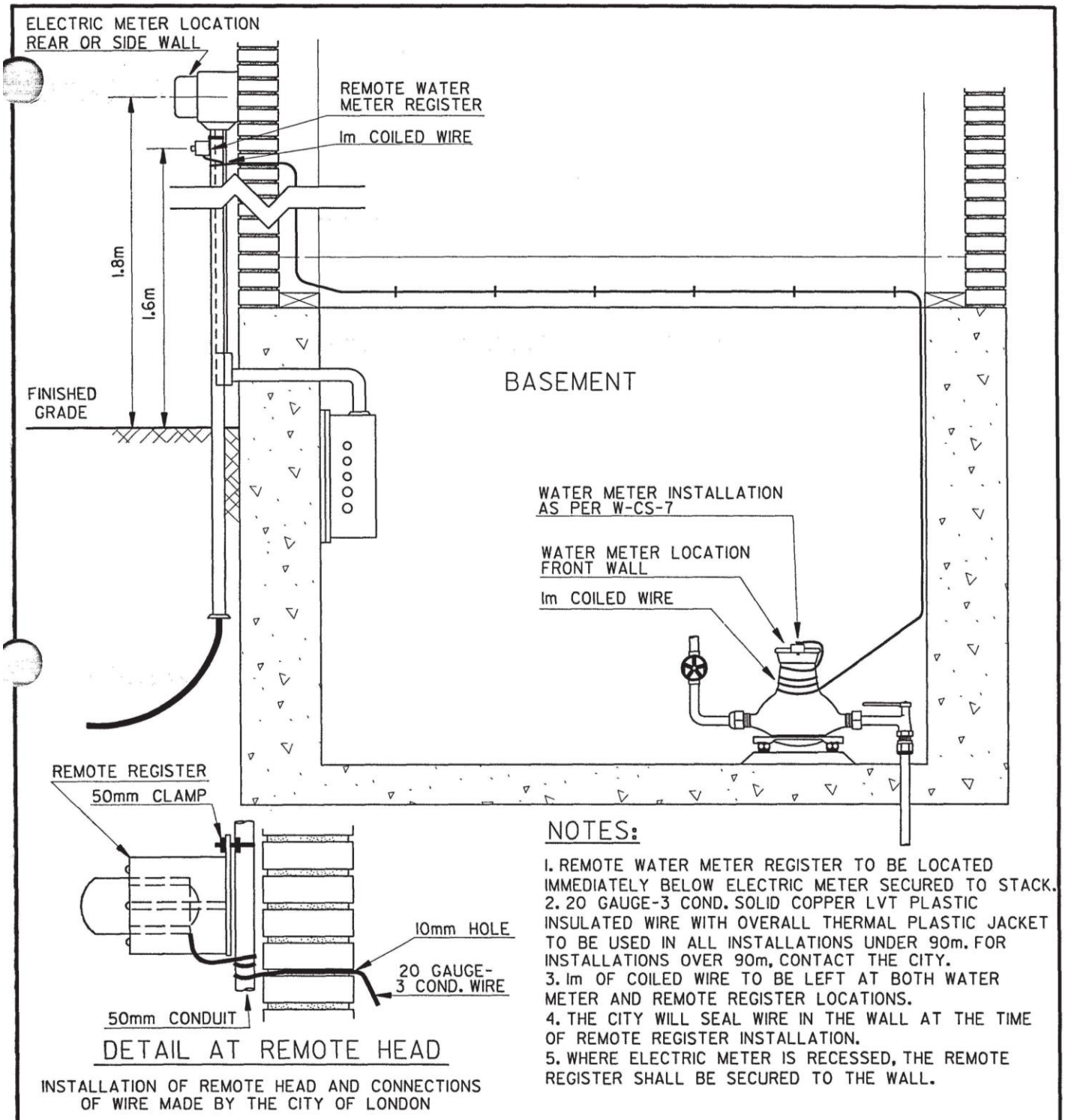

DETAIL AT REMOTE HEAD

INSTALLATION OF REMOTE HEAD AND CONNECTIONS OF WIRE MADE BY THE CITY OF LONDON

NOTES:

1. REMOTE WATER METER REGISTER TO BE LOCATED IMMEDIATELY BELOW ELECTRIC METER SECURED TO STACK.
2. 20 GAUGE-3 COND. SOLID COPPER LVT PLASTIC INSULATED WIRE WITH OVERALL THERMAL PLASTIC JACKET TO BE USED IN ALL INSTALLATIONS UNDER 90m. FOR INSTALLATIONS OVER 90m, CONTACT THE CITY.
3. Im OF COILED WIRE TO BE LEFT AT BOTH WATER METER AND REMOTE REGISTER LOCATIONS.
4. THE CITY WILL SEAL WIRE IN THE WALL AT THE TIME OF REMOTE REGISTER INSTALLATION.
5. WHERE ELECTRIC METER IS RECESSED, THE REMOTE REGISTER SHALL BE SECURED TO THE WALL.

CITY OF LONDON STANDARD DRAWING

REMOTE WATER METER REGISTER INSTALLATION

DWG: W-CS-67	DATE 1999 01 30	APPROVED BY CITY ENGINEER	NTS

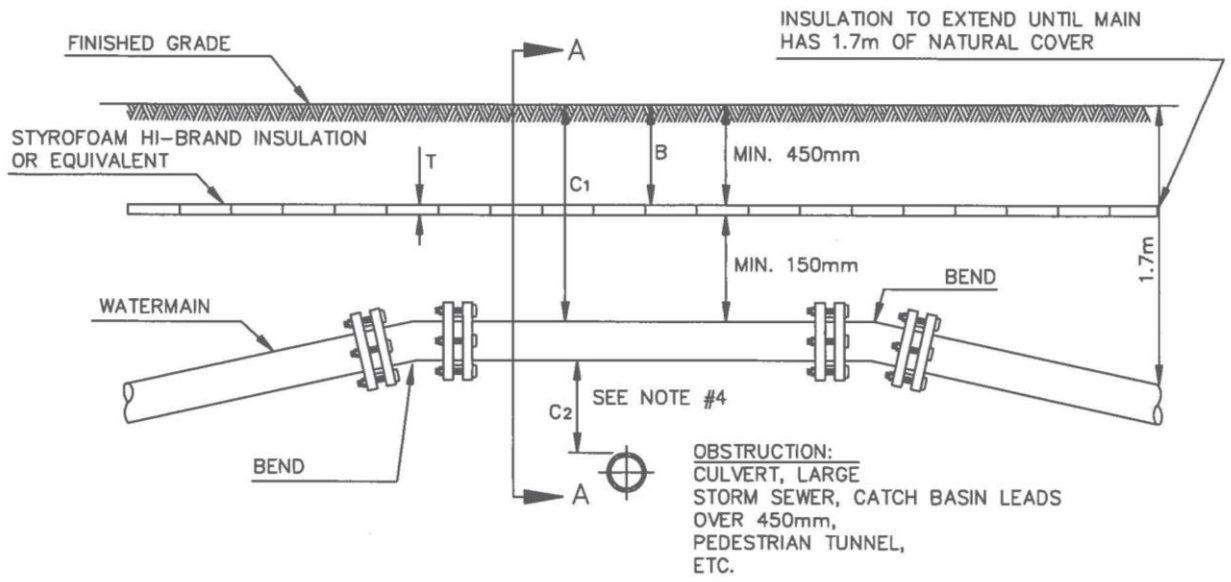

ELEVATION OF JOINT DEFLECTION OFFSET

SAME PROCEDURE WILL APPLY TO OFFSETS SHOWN ON DWG. W-CS-12

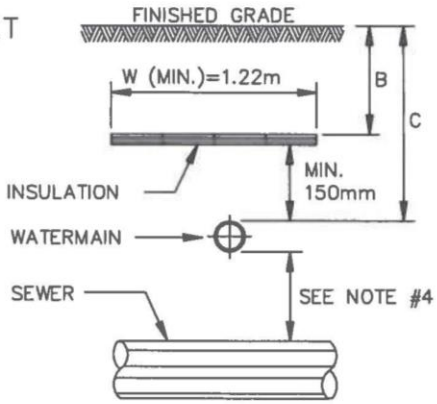

SECTION "A – A"

NOTES:

1. ALL DIMENSIONS ARE IN mm UNLESS SHOWN OTHERWISE.
2. MINIMUM COMPRESSIVE STRENGTH OF INSULATION TO BE 690kpa. INSULATION SHALL BE INSTALLED IN THICKNESS REQUIRED, IN STRICT ACCORDANCE WITH THE INSULATION MANUFACTURER'S DIRECTIONS. INSULATION SHALL BE INSTALLED OVER 150mm OF FINE GRANULAR FILL SCREEDED SMOOTH.

   BUTT INSULATION TIGHTLY TOGETHER WITHOUT GAPS, STAGGER END JOINTS IF MORE THAN ONE LAYER USED.

   TO HOLD IN PLACE, SKEWER INSULATION BOARD TO GROUND WITH 200mm HARDWOOD SKEWERS, MIN. 6mm DIA. AND 200mm LONG. 2 SKEWERS PER BOARD.

   IF 2 LAYERS OF INSULATION ARE USED, SKEWER ONLY THE TOP LAYER THROUGH THE FIRST LAYER USING A SKEWER 150mm LONGER THAN THE COMBINED THICKNESS OF THE 2 LAYERS OF INSULATION. INSERT SKEWERS AT APPROXIMATELY 30^ ANGLE.

   PLACE AT LEAST 200mm OF FINE GRANULAR FILL OVER INSULATION BEFORE USING COMPACTION EQUIPMENT.
3. IF PIPE IS PVC, OFFSET MUST BE MADE USING W-CS-12 DETAIL.
4. MIN. CLEARANCE AS PER C OF L DESIGN SPECIFICATIONS 7.4.7.2. AND M.O.E. PROCEDURE F-6-1.
5. IT SHOULD BE NOTED THAT THIS DETAIL FOR INSULATION IS FOR PROTECTION FROM FREEZING. THIS DETAIL IS NOT TO BE USED FOR PROTECTION FROM HOT SOURCES SUCH AS LONDON DISTRICT ENERGY INFRASTRUCTURE.

INSULATION THICKNESS		INSULATION WIDTH	
C(m)	T(mm)	B(m)	W(m)
0.60	75	0.45	2.44
0.75	75	0.60	1.83
0.90	50	0.75	1.54
1.09	50	0.90	1.22
1.20	25		
1.35	25		
1.50	25		

CITY OF LONDON STANDARD DRAWING

(PROTECTION FROM FREEZING)

INSULATION OF WATERMAINS AND OFFSETS

DWG W-CS-68	DATE 2015 10 29	APPROVED BY CITY ENGINEER: for	NTS

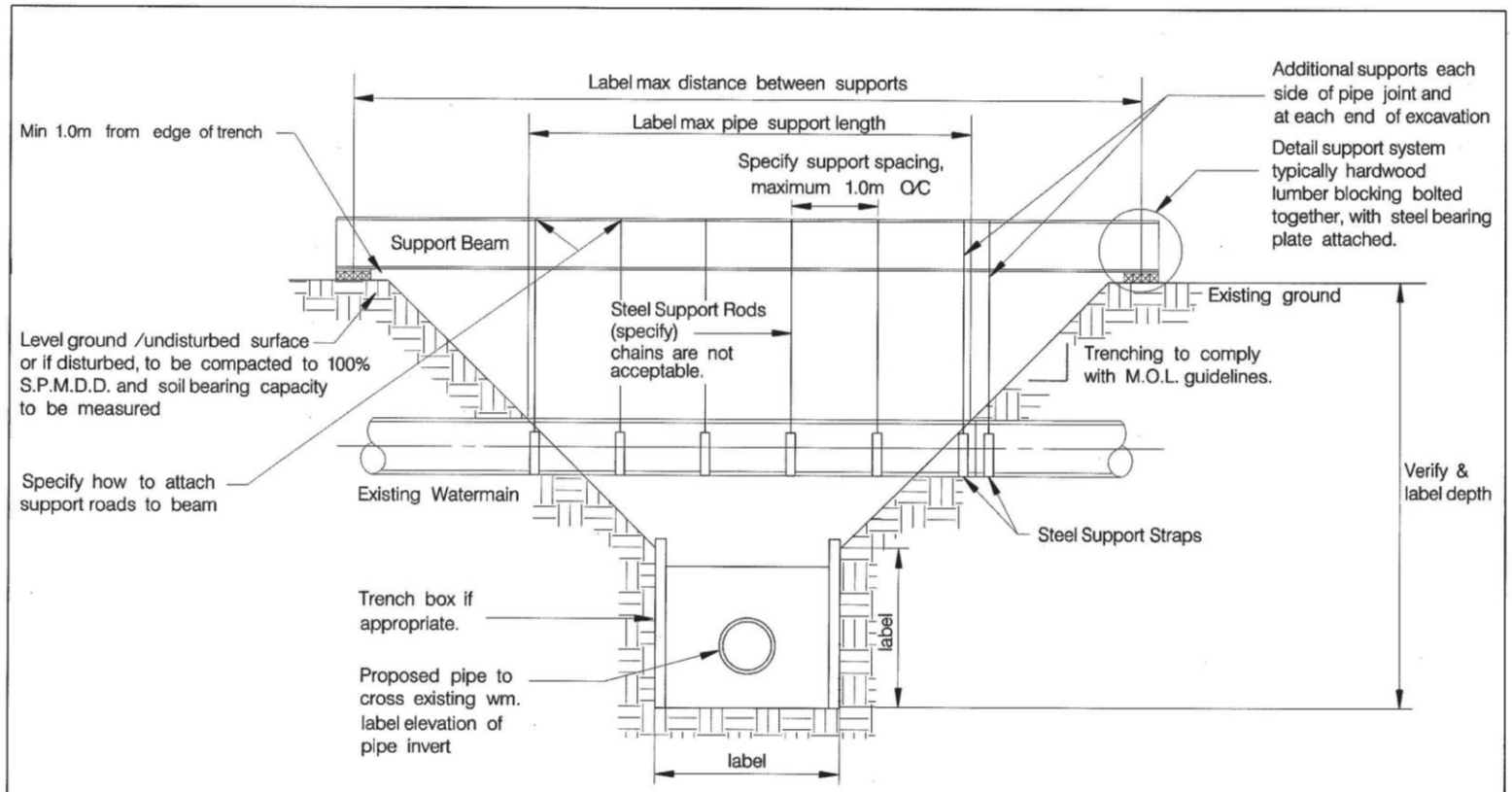

TYPICAL SUPPORT CROSS SECTION

SEE DRAWING W–CS–69,– SHEET 3 FOR REQUIREMENTS

CITY OF LONDON STANDARD DRAWING			
450mm AND UP TYPICAL WATERMAIN SUPPORT DETAIL FOR UTILITY CROSSINGS USING OPEN CUT CONSTRUCTION			
DWG: W–CS–69 SHEET 1	DATE 2012 10 01	APPROVED BY CITY ENGINEER: John M. Brown	NTS

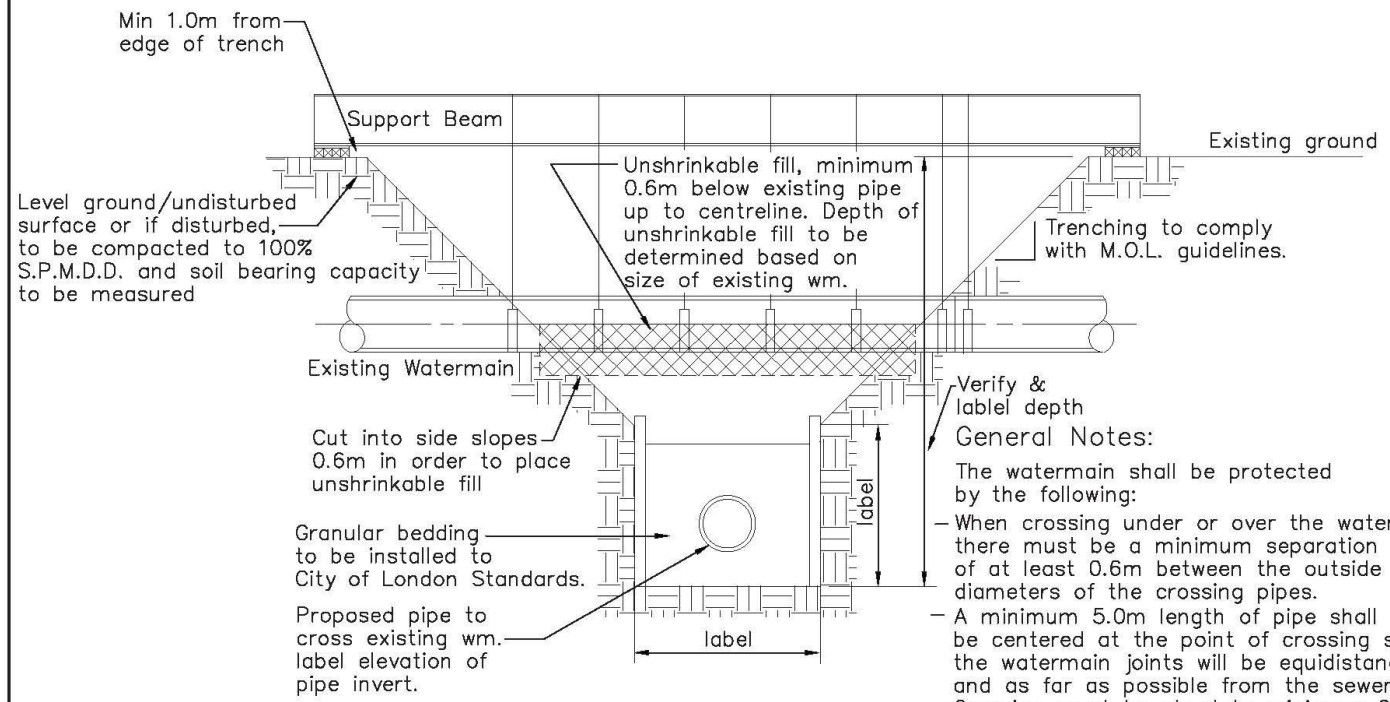

TYPICAL REINSTATEMENT/
BEDDING DETAIL CROSS SECTION

SEE DRAWING W-CS-69,-
SHEET 3 FOR REQUIREMENTS

General Notes:

The watermain shall be protected by the following:

- When crossing under or over the watermain there must be a minimum separation of at least 0.6m between the outside diameters of the crossing pipes.
- A minimum 5.0m length of pipe shall be centered at the point of crossing so that the watermain joints will be equidistance and as far as possible from the sewer or PDC. Crossing must be absolute minimum 2.0m from watermain joint.

All construction methods including excavation and backfill compaction within 0.6m of existing watermain shall be done by hand.

It should be noted that the support structure is to remain in place until the watermain is fully supported by the reinstated bedding (i.e. until 0.5MPa unshrinkable fill is cured, provide bond break).

CITY OF LONDON STANDARD DRAWING

TYPICAL REINSTATEMENT / BEDDING DETAIL
FOR 450mm AND UP WATERMAIN SUPPORT

DWG: W-CS-69 SHEET 2	DATE 2019 08 26	APPROVED BY CITY ENGINEER:	NTS

SUPPORT DETAIL REQUIREMENTS

Submission and Design Requirements

When crossing below on existing watermain (450mm or greater) using open cut construction, the following must be provided to the City of London Water Engineering Division for review/approval a minimum of two (2) weeks prior to the proposed work taking place:

A) A utility support system drawing stamped by a Professional Engineer, including the following: (See W-CS-69, Sheet #1 for Typical Drawing)

- (i) Complete plan and cross-section drawings indicating support system including all appropriate dimensions and details
- (ii) Provide all structural calculations for support systems including load and deflection information for proposed beam. Provide details to confirm adequacy of support mechanism proposed to transfer loading of supported utility to support beam.
- (iii) Provide calculations for loading transferred to the end support of the beam structure and confirm adequate soil bearing capacity for the system designed for beam supports.
- (iv) Identify procedure for transferring load of structure to be supported to support beam.
- (v) Identify allowable deflections for watermain(considering size, material type and jointing system). Confirm deflections for proposed support system are less than the allowable deflection for the watermain.

B) Contractor's work plan. The work plan shall include the following:

- (i) Identification of major activities to be carried out in association with the utility crossing.
- (ii) A schedule of these works
- (iii) Remove blackline and watermain for deflection

Under no circumstances will the work be allowed to proceed under adverse weather conditions.

The work may not proceed until all of the above are received and approved. Please note that traffic control plans affecting the City of London Right-of-Way, if required, are to be submitted for approval separately to the Transportation Engineering Division. At all times, all requirements of the Occupational Health & Safety Act must be met.

BEDDING/REINSTATEMENT DETAIL REQUIREMENTS

Submission and Design Requirements

When crossing below on existing watermain (450mm or greater) using open cut construction, the following must be provided to the City of London Water Engineering Division for review/approval a minimum of two (2) weeks prior to the proposed work taking place:

1) When crossing watermains 450mm and greater a drawing(s) must be submitted indicating reinstatement and bedding is required. The drawings shall include the following: (See W-CS-69, Sheet #2 for Typical Drawing)
   - (A) Cross-section drawing(s) including all appropriate dimensions and details.
   - (B) If appropriate, identify insulation to be installed.
   - (C) To prevent settlement of watermain, install 0.5MPa unshrinkable fill with bond breaker (i.e. 6mil poly) to a minimum 600mm below watermain up to the centreline OR obtain recommendations regarding watermain bedding from the watermain pipe manufacturer, if any of the following apply:
     - (i) there is less than 600mm separation between utilities crossing each other, OR
     - (ii) either structure is greater than 1000mm in diameter, OR
     - (iii) insulation is being placed between the utilities

2) Contractor's work plan. The work plan shall include the following:
   - (A) Identification of major activities to be carried out in association with the utility crossing.
   - (B) A schedule of these works.

Under no circumstances will the work be allowed to proceed under adverse weather conditions.

The work may not proceed until all of the above are received and approved. Please note that traffic control plans affecting the City of London Right-of-Way, if required, are to be submitted for approval separately to the Transportation Engineering Division. At all times, all requirements of the Occupational Health & Safety Act must be met.

CITY OF LONDON STANDARD DRAWING

GENERAL SUBMISSION AND DESIGN REQUIREMENTS
FOR WATERMAIN SUPPORT AND BEDDING / REINSTATEMENT

DWG	DATE	APPROVED BY	
W-CS-69 SHEET 3	2019 08 26	CITY ENGINEER	NTS

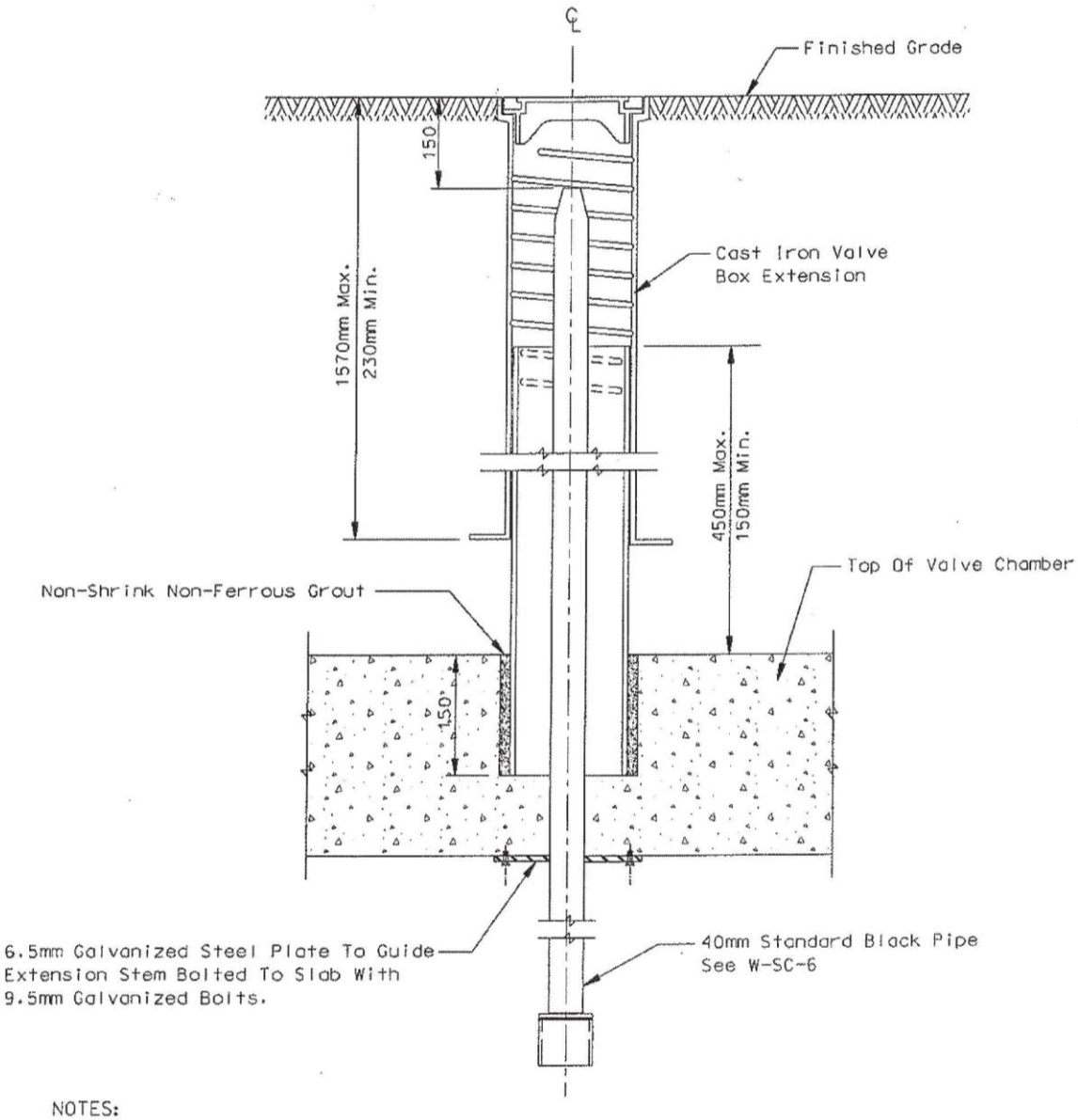

NOTES:

1. APPROVED 130mm SCREW VALVE BOXES ARE BIBBY CODE 7130 OR STAR PIPE PRODUCT VBOHD.
2. ALL DIMENSIONS ARE IN MILLIMETRES UNLESS OTHERWISE SHOWN.

CITY OF LONDON STANDARD DRAWING

VALVE BOX ON CHAMBERS

DWG	DATE	APPROVED BY CITY ENGINEER:	
W-CS-70	2009 11 20		NTS

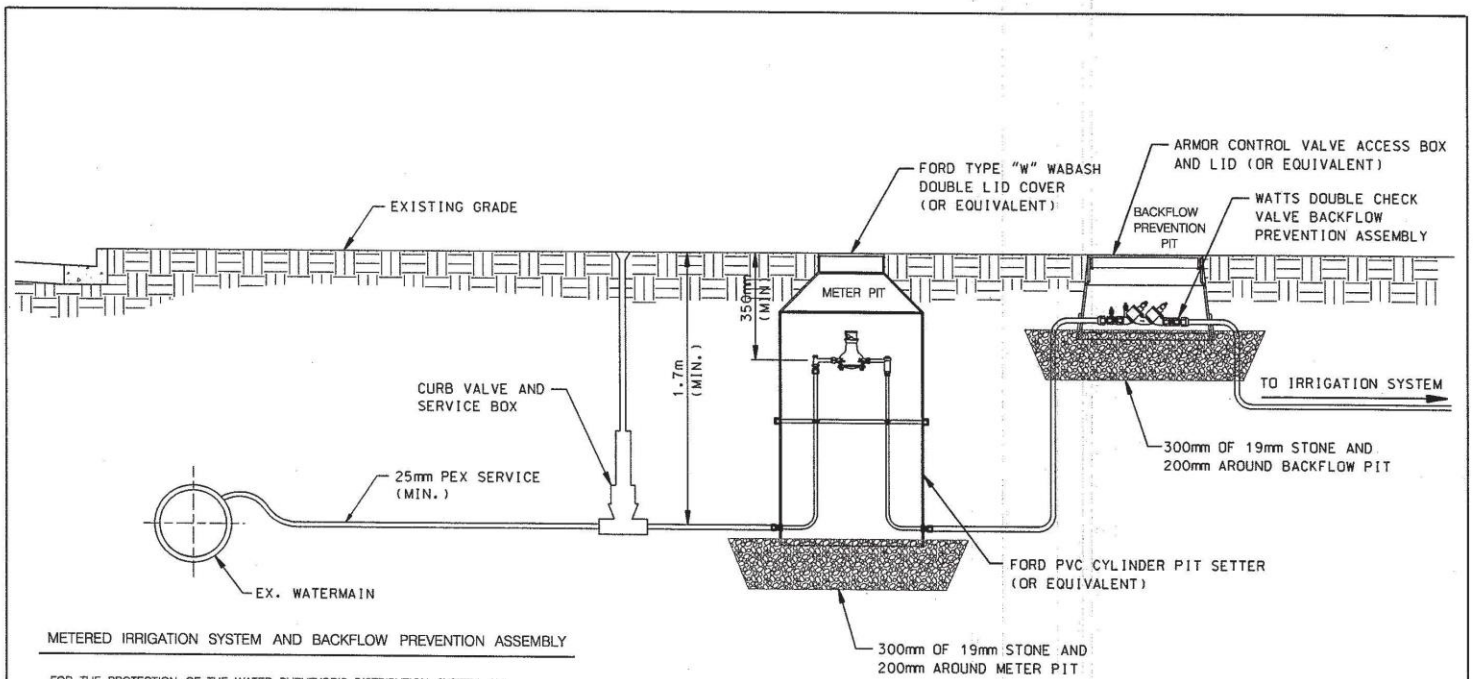

METERED IRRIGATION SYSTEM AND BACKFLOW PREVENTION ASSEMBLY

FOR THE PROTECTION OF THE WATER PURVEYOR'S DISTRIBUTION SYSTEM, ALL IRRIGATION SYSTEMS MUST BE METERED AND MUST HAVE AN APPROVED BACKFLOW PREVENTION ASSEMBLY THAT IS COMPATIBLE WITH THE DEGREE OF HAZARD.

BACKFLOW PREVENTION DEVICES SHALL BE INSTALLED IN ACCORDANCE WITH THE ONTARIO BUILDING CODE AND CAN /CAS-B64 SELECTION AND INSTALLATION OF THE BACKFLOW PREVENTERS /MAINTENANCE AND FIELD TESTING OF BACKFLOW PREVENTERS AND CITY OF LONDON WATER BY-LAW W-3.

ALL BACKFLOW PREVENTION DEVICES SHALL BE INSPECTED AND TESTED AT THE EXPENSE OF THE OWNER, UPON INSTALLATION, AND THEREAFTER ANNUALLY, OR MORE OFTEN IF REQUIRED BY THE CITY, BY PERSONNEL APPROVED BY THE CITY TO CARRY OUT SUCH TESTS TO DEMONSTRATE THAT THE DEVICE IS IN GOOD WORKING ORDER.

WATER METER PITS ARE TO BE IN ACCORDANCE WITH THE SECTION 441.05.22 OF THE CITY OF LONDON STANDARD CONTRACT DOCUMENTS FOR MUNICIPAL CONSTRUCTION PROJECTS AND THE MANUFACTURER'S RECOMMENDATIONS.

CITY OF LONDON STANDARD DRAWING

METERED IRRIGATION SYSTEM AND BACKFLOW PREVENTION ASSEMBLY

DWG	DATE	APPROVED BY CITY ENGINEER	
W-CS-71	2012 01 26		NTS

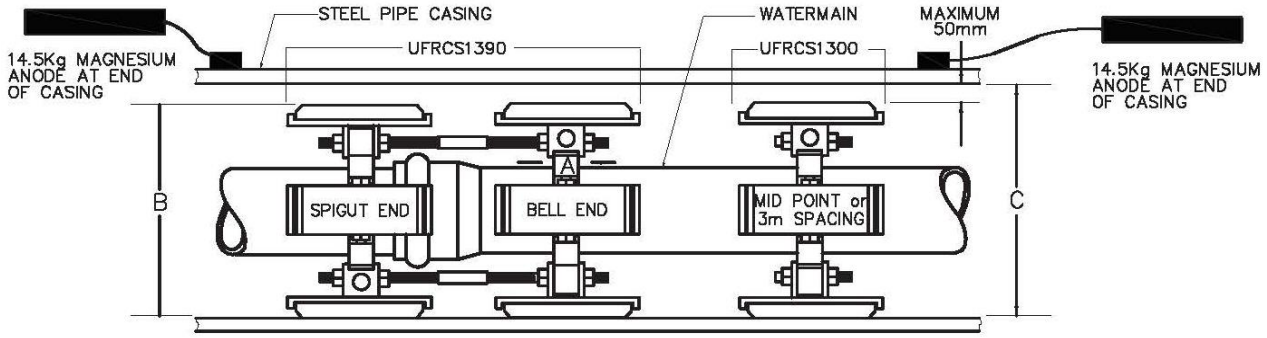

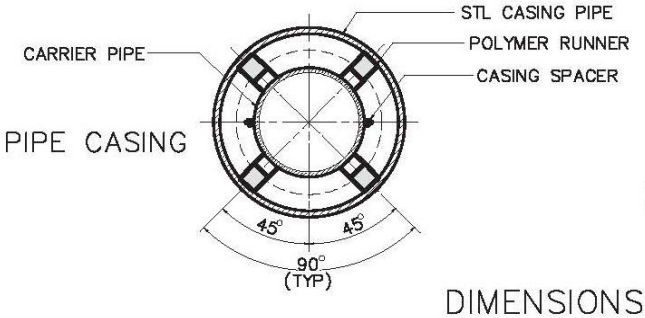

PIPE CASING

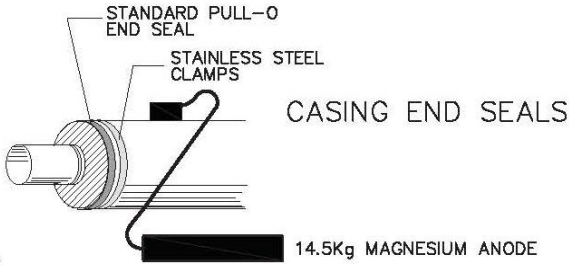

CASING END SEALS

DIMENSIONS

NOM. PIPE SIZE	ACTUAL PIPE OD (IN.)	A	B (APPROX)	1390 RESISTANT ROD		C REC. CASING SIZE (ID)	CASING MIN. WALL THICKNESS (ID)
				NO.	SIZE		
4"	4.80	1-1/8"	11-3/4"	2	3/4"X17"	12.4"	0.25
6"	6.90	1-1/8"	13-3/8"	2	3/4"X17"	14"	0.3125
8"	9.05	1-1/8"	17-1/8"	2	3/4"X17"	17.875"	0.3125
10"	11.10	1-3/8"	19-3/4"	4	3/4"X24"	21.5"	0.3125
12"	13.20	1-3/8"	21-7/8"	4	3/4"X24"	23"	0.375
14"	15.30	4"	26-3/8"	6	3/4"X30"	27"	0.375
16"	17.40	4"	28-3/8"	6	3/4"X30"	30"	0.500
18"	19.50	5"	30-1/2"	8	3/4"X30"	31"	0.500
20"	21.60	7"	32-1/4"	8	3/4"X36"	33"	0.500
24"	25.80	7"	38-1/4"	12	3/4"X36"	39"	0.500

*Working Pressure rating for the restrained carrier pipe, minimum 2:1 safety factor on all sizes

NOTES:

Carrier pipes to be installed inside casings shall be installed with self-restraining casing spacers. Casing spacers shall provide axial thrust retsraint to prevent pipe joint separation during and after installation. They shall also provide dielectric insulation between the carrier pipe and the casing and facilitate installation of the carrier pipe into the casing.

Restrained casing spacers shall be manufactured of high strength ductile iron, ASTM A536, Grade 65-45-12. Restraining rods shall be of high strength, low alloy material meeting the requirements of ANSI / AWWA C111 / A21.11. Casing spacer runners shall be of ultra high molecular weight polymer.

Retrained casing spacers shall be provided at all pipe bell joints. In addition, casing spacers shall be installed each 3 metres of the pipeline to support the pipe barrel and the weight of its contents. Retrained casing spacers shall be Uni-Flange Series UFRCS1300 (pipe barrel) or UFRCS1390 (for pipe bell joints) or approved equal.

CITY OF LONDON STANDARD DRAWING

CASING DETAIL

DWG:	DATE	APPROVED BY CITY ENGINEER:	
W-CS-72	2019 08 26		NTS

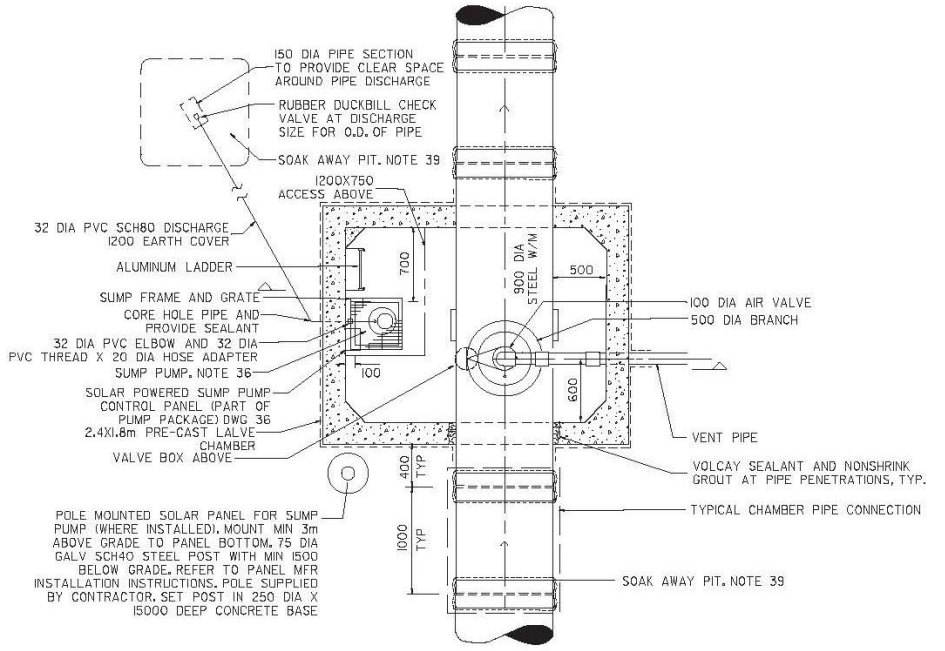

PLAN

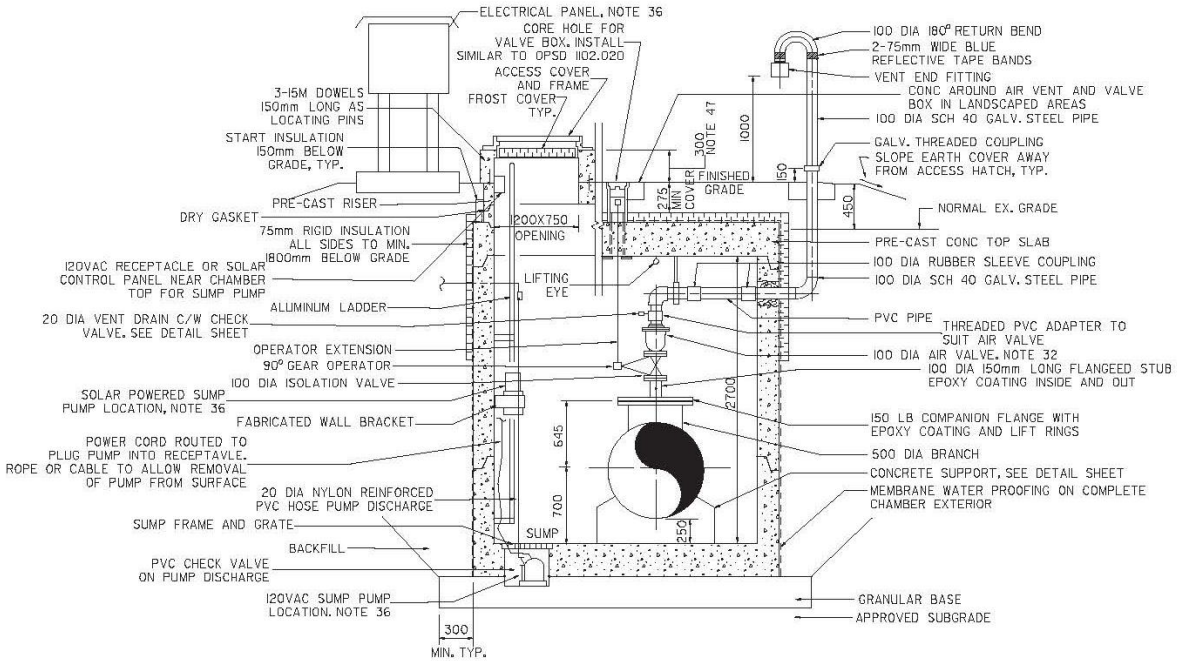

SECTION

CITY OF LONDON STANDARD DRAWING

TYPICAL AIR VALVE CHAMBER

DWG: W-CS-74	DATE 2014 11 04	APPROVED BY CITY ENGINEER:	NTS

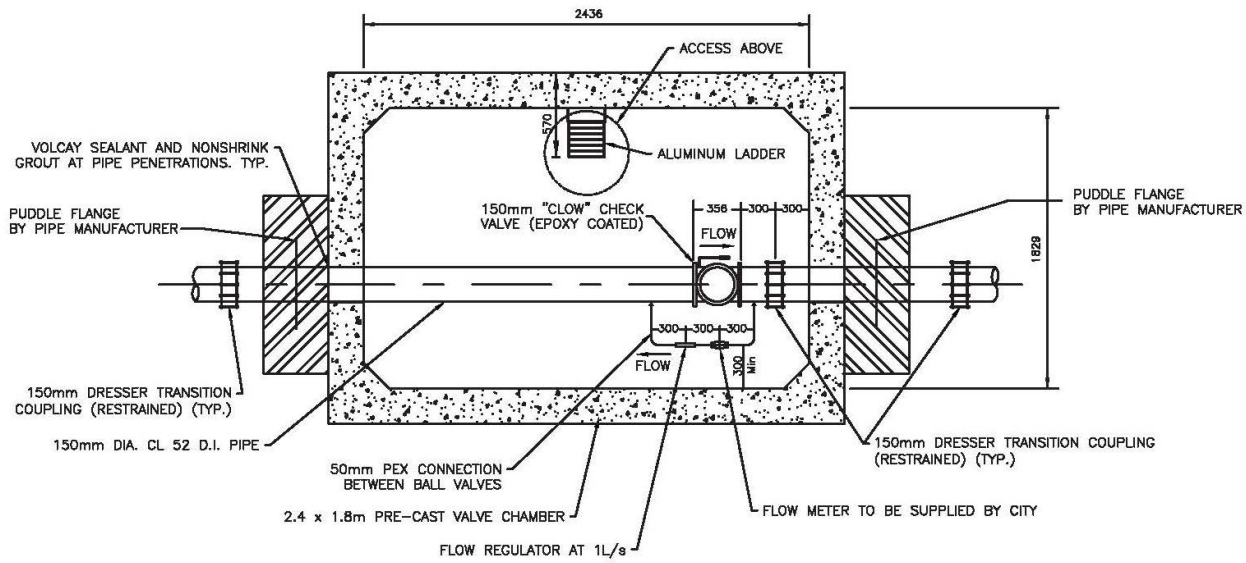

MINIMUM SIZES OF PIPE AND FLOW REGULATOR SHOWN.
SIZES TO BE DETERMINED BASED ON EACH SPECIFIC APPLICATION

SEE SHEET 2 FOR SECTION VIEW

CITY OF LONDON STANDARD DRAWING

CHECK VALVE CHAMBER (PLAN VIEW)

DWG	DATE	APPROVED BY	
W-CS-75 SHEET 1	2019 09 09	CITY ENGINEER	NTS